DISPARATEUM
BY RATHAYIBACTER

*For posterity:*
*Today I made a discovery. Possibly the most important discovery of all time; even my previous accomplishments pale in the face of it. Today I confirmed what I'd long suspected, what I'd always hoped but could never put into words.*

*This is a perfect world. Born from nothing, shaped by the all-knowing, and set into motion with divine purpose.*

*I am to be this world's guardian. I know this now. All my life, the signs have pointed to this. I leave my words here so that the inheritor of this book can carry on my mission, and the Disparateum will be preserved forever.*

*~Alexander*

If it's interesting,
you can do it

If you forget about it,
ignore it

The City is wide enough
for all of us

# DISPARATEUM

A game for a Knight,
a Thief, a Seer,
and a Tower

# Ritual of Beginning

## For Ushering In a New Age of Stories

It's early morning when the Knight arrives in the Named City. They've traveled far to get here, and are in need of rest.
**[To the Knight:]** In a word, why have you come?

The Knight walks the City's streets, taking in the sights. They bump into a stranger, and take a moment to apologize and explain that they're not from around here. The stranger laughs and forgives them.
**[To the Thief:]** During your conversation, what precious thing did you steal from the Knight?

The Knight quickly realizes what happened, and tracks the Thief across the City. They find them at a market stand, trying to sell their ill-gotten goods to a student of mysteries.
**[To the Seer:]** The moment you see the Knight, what vision of their future consumes you?

Gradually, with the Seer's help, the Knight and Thief come to a mutual understanding.
**[To the Seer:]** What hidden side of the Thief do you bring to light?
**[To the Thief:]** What promise do you make to the Knight?
**[To the Knight:]** What guidance or advice do you receive from the Seer?

# DISPARATEUM

Welcome! Whether it's a slim, neatly-printed volume, a crackling leather-bound tome, or a stack of disorganized papers stolen from a dying man, the book in your hands is special. Every other book contains a world, beautifully preserved between its pages like a pressed flower. This book, on the other hand, contains everything that's ever been, that ever was, and that ever could be.

Well, most of it. It's got the important parts, at least.

**SIDEBARS**
This book features a number of helpful sidebars, which expand on and provide context for various things brought up in the primary text. It may also feature a number of annotations from a or multiple prior wielders of this book, the accuracy of which unfortunately cannot be verified by this book's author. If you find the desire striking you, please feel free to add your own annotations.

*Contents*
*2-7: Mechanics*
*8-13: The City*
*14-19: The Dreaming*
*20-23: The Narrative*
*24-27: The Network*
*28-31: The Reflection*
*32-35: The Interior*

## DISPARATEUM, THE WORLDSCAPE

Our world is but one among many. We exist in a single paper-sharp slice of reality, pressed between the past and future, adjacent to the imaginary and unimaginable, above death and beneath eternity. Each layer of reality exists in relation to all the rest, and the paths we chart between them are often tangled to the point of absurdity. These worlds, the relationships between them, and the paths that wind between, are collectively known as the Disparateum.

The Named City isn't the source of the Disparateum, nor does it have any control over it. Instead, it's a point of convergence. The City's streets play host to impossibilities from many worlds, and there's a doorway to another world tucked around every corner. If you imagine the Disparateum as the full spectrum of light, then the City is a prism.

## DISPARATEUM, THE GAME

This book isn't merely a well-researched guide to the Disparateum, it's also a tabletop role-playing game. For those of us who can't make the trip to the Named City, this book will give you the tools and information needed to step into the role of a trailblazer through the Disparateum.

To play, you'll need pens and pencils, sheets of paper, tokens, paperclips, staples, and scissors, or suitable replacements. The sheets should be split into a 4x2 grid, which I tend to do by folding it three times (see Figure 1). I also recommend cutting some of the sheets in half to make pairs of 2x2 sheets, as they're useful for Layers and NPCs.

**FIGURE 1**
A sheet folded into eight sections.

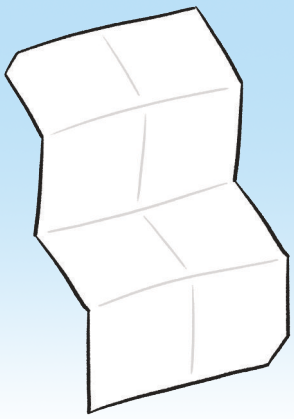

## SAFETY

When we play games, we create a space to explore and express ourselves, free from the limitations and consequences of the outside world. Or at least, that's the goal, but ultimately we'll never fully free ourselves from the context we're in. We always bring some part of us into the game space, and if we do that frequently enough it's inevitable that we'll get hurt. That's not a failing, that's a fact of life. However, we can work to create games where it's safe to get hurt, where it doesn't hurt as badly, and where we can bounce back because we have each others' backs. I highly recommend establishing tone and expectations before your first session, using safety tools such as the X Card, Lines and Veils, and Script Change during play, and checking in regularly with your fellow players. The City is wide enough for all of us- let's keep it that way.

*Never been fond of that slogan.*
*Feels too tourist-y. It's unbecoming.*

# Player Roles

Each player chooses a unique role from the list below for their character. These roles give the character you're playing some starting definition and a handful of unique abilities, but also offer narrative roles for that character to explore, play with, and reshape.

## The Knight

You're a traveler, come from some faraway land to the Named City. You don't know the ways of this strange place, but you'll have to learn them to accomplish whatever it is that's brought you here.

In story terms, you'd be the hero, the protagonist: your actions guide the narrative, and it's your goals the plot often follows. Of course, in a game like this everyone should get plenty of time to shine, but this role is for people who don't mind being singled out by the narrative. The Knight is a good role to play if you like to be the voice of reason who keeps the game grounded, or want to guide the narrative by centering it on particular themes at the core of your character.

### The Knight
**Trait- Role**
An outsider, arriving here at the end of a long and arduous journey.

**Rank One:** The Knight is an outsider, and doesn't know the ways of the Named City.
**Rank Two:** The Knight is always clear-minded, alert, and aware of the true nature of the world.
**Rank Three:** The Knight knows many things from beyond these walls, and always has a nugget of wisdom or well-worn advice.
**Rank Four:** The Knight is a good judge of character, and the trust they place in others always comes to fruition.

## The Thief

You're a local, the flesh and blood of the Named City. You've explored all its corners, discovered all its secrets, and its people love you- even if you bring them trouble more often than not.

In story terms, you'd be the best friend or rival: you play off the hero and the rest of the cast, bring out their most interesting elements, and complicate the dynamic enough that there's always new stories to tell. The Thief is a good role to play if you love making rash decisions and seeing what the game spits back at you, or if you want to guide the narrative by introducing new threats and complications.

### The Thief
**Trait- Role**
A troublemaker, always looking to shake the foundations of the City.

**Rank One:** The Thief is always at the center of trouble.
**Rank Two:** The Thief always knows someone who can help, but they last parted on poor terms.
**Rank Three:** The Thief has done everything at least once, and has crucial insight into how to do it again.
**Rank Four:** The Thief can't be caught, held down, or taken out of the picture.

## The Seer

You're an enigma, a seeker of mysteries with one foot in reality and the other in dreams. You know that there's more to the world than anyone expects, and you're here to show them that.

In story terms, you'd be the mentor or cryptic guide: you know more than you let on, uncover incredible secrets, and get to speak in coy riddles. The Seer is a good role to play if you enjoy being audience to the game rather than a major contributor, or if you want to guide the narrative by subtly planting seeds for future events.

### The Seer
**Trait- Role**
A mystic, bearing knowledge beyond the scope of belief.

**Rank One:** The Seer is drifting through life, careless and carefree.
**Rank Two:** The Seer knows what nobody else does, but struggles to convey it properly.
**Rank Three:** The Seer can ask anyone any question at any time.
**Rank Four:** The Seer can see the whole of everything, all at once, and pluck crucial understanding from its infinite complexity.

## The Tower

You don't play a particular character. Instead, you play as the Named City, the Disparateum that feeds through it, and everyone and everything the other players encounter on their journey.

In story terms, you'd be the narrator: you observe everything from an omniscient perspective, frame scenes, put the players into interesting situations and see what they do. You bridge the gap between the players and the world, and offer them new possibilities to explore. The Tower is a good role to play if you're most comfortable in Game Master roles in other games, or if you want to guide the narrative by deciding which parts of this book to use and which to ignore.

# The City

## Where People Live Near-Ordinary Lives at the Nexus of Worlds

### The City
**Trait– Layer**
The unshakable foundation of the Disparateum. Always open, and is accessible through any path back to reality.

**[Recover traits by:]** Gathering obligations based on them, or causing long-term problems tied to them.

### Stable
**Trait**
The City is the Disparateum's bedrock, and remains steady even during the most dramatic of changes.

**[1 token:]** Set a new scene during a quiet moment.

### Consequential
**Trait**
Nothing that happens in the City goes unnoticed, and all things are repaid in time.

**[1 token:]** Reintroduce the consequences of a decision.

### Sprawling
**Trait**
There's always more to find if you know where to look.

**[1 token:]** Find something surprising around the corner.

**[3 tokens:]** Add a new fixture to the City's tapestry.

**The City is wide enough for all of us.** At the edge of the world lies an incredible place, a place where dreams take on a life of their own and everyone can find what they're seeking. A place that acts as a prism for a glorious rainbow of other worlds.

The City is old. It's persisted through many ages, changing constantly but carrying the weight of that age along. Every culture that's called it home has given it a different name, and it carried those names with it too. At this point, just about whatever name or epithet you can imagine has been used for it, to the point that many people nowadays have taken to calling it the Named City and moving on. In an attempt at an impossible notion of objectivity, and out of a deep affection for the damned place, I'll be doing the same.

# Throne District

In the very center of the Named City, a cluster of buildings forms what appears to be an enormous blocky chair. The neighborhood surrounding it, aptly called the Throne District, is primarily a place of entertainment and relaxation for the City's residents.

## The Park

Starting only a few blocks from the main gate and winding all the way to the base of the Throne, a broad greenway forms one of the Named City's main thoroughfares. Dotted throughout it are playgrounds, artificial lakes, and old folks playing chess. The Park branches in places, extending a few blocks into various neighborhoods before terminating in a monument or statue of some kind. Many of these are decorated with flowers and gifts, though none receive as many as the unlabeled pillar of obsidian directly in front of the Throne.

## Parlor Tricks

An ice cream parlor run by Maggie Morthendain, a powerful wizard. It boasts an incredibly long list of flavors, and a sign behind the counter informs patrons that if they can name a flavor not found on the menu, Maggie will personally track it down and add it within a day's time. Because of this, Parlor Tricks boasts a massive, weighty tome of a menu, with flavors found nowhere else in the world, including a hundred or so conceptual flavors and three that defy logic.

## The Outlook

A tall, narrow hotel building tucked into a corner of the district. It used to be a place frequented by ambassadors and traveling royalty, but as the world outside has become tangled up in its own affairs and the Named City's gone largely ignored, the Outlook's grown quiet. It's still impossibly grand, though. Live music seeps into the twisting hallways from some faraway lounge, gorgeous paintings and sepia tone photographs clutter every available wall, and each room is furnished in a unique style and features an incredible view.

## Glasspillar Music Hall

Built into the back of the Throne itself is an enormous concert hall, boasting a gorgeous amphitheater, plentiful tiered seating, and no less than three gift shops. It's barely ever used. Everyone involved in the music scene knows that the real shows happen all over, tucked away in basements or back alleys or performed spontaneously in the street. Glasshall isn't completely pointless, however: it's often used as common ground during tense negotiations, and children often use the seating area to play games when they're supposed to be in school.

## The Theater

The Theater is a mainstay of the City's entertainment and one of the very few businesses that stays open after dark. They put on three plays a day, with the morning and evening slots dedicated to popular classics and the midnight slot always sporting something new and experimental. Whatever person or collective writes these midnight plays is clearly quite talented, but the late night shows have received just criticism for layering cryptic symbolism, archaic language, and self-referential material so heavily that they've become practically unintelligible.

**TECHNOLOGY**

The City's level of technology doesn't cleanly map to any particular historical moment in the world outside, though some things are recognizable. Cars and planes don't exist here, travel to and from the City is done through magic, train, or caravan. Guns don't exist either, though black powder and other explosives do–there's simply easier ways to kill, if you're willing to face the consequences. Radio and television are fairly common, and even early iterations of the internet are starting to make their way to the City. If you're wondering if a particular technology exists, the answer is likely that someone's made it somewhere, but it's anyone's guess if it'll catch on.

*Strange when the Book offers… opinions, particularly ones as odd as this. It seems to imply that the Hall was doomed from the start, when of course it was quite successful. I used to go as a child. Then… well, things change. Sometimes, at least.*

# The Gold Market

Every city worth its salt has an open-air market, and the City is no different. The Gold Market is a constantly rotating cast of small booths occupying several blocks of street. Anyone you meet in the City has or has considered setting up a booth here, but today we'll single in on a few you'll be sure to see every visit.

### Currency in the City

Over its history, the Named City has been part of many nations, and traded with many others. Nowadays it exists beyond borders and rulers, but there's still plenty of old currency floating around. Some folks have preferences, but nobody'll turn you down for not having the right kind of coin.

Additionally, for those uninterested in carrying coin purses around, a rich barter economy underlies the Named City's markets. If you've got goods, valuables, or a willingness to tackle some odd jobs, the world's your oyster.

## The Blacksmith's Booth

The Old Blacksmith has a booth at the market set up directly in front of his smithy mostly as an excuse to sit in the sun and watch soap operas on a shitty portable TV. His three daughters do most of the day-to-day work nowadays. Rumor has it that the Blacksmith used to be a real living legend, forging tools and weapons for royalty, adventurers, and minor gods. They say his daughters are part divine, and that their celestial parent visits on solstices to have their armor repaired and spear sharpened. Of course, anyone who's met them knows how absurd this all is–they're just a sweet, down-to-earth family like any other.

## The Landscapist's Booth

The Landscapist sits at a small handmade easel at the edge of the Market. She's surrounded by paintings of the City from every angle and perspective you can imagine. She has a few of her best works tattooed across her arms and back, and when she moves it looks like the skyline twisting and reshaping itself.

## The Puppet Show

Every hour, on the hour, a cute little stand decorated to look like a stage puts on one of a variety of miniature puppet shows. The stand has an ongoing partnership with the Theater, often doing simplified, kid-friendly versions of currently-running plays using the actual actors for voices. The Puppeteer themself wears a full suit of armor, decorated to resemble an unpainted wooden puppet. Cut strings hang limply from the suit's hands and elbows. Behind the visor, one can faintly make out bright, smiling eyes, but no other features of the mysterious figure's face.

*Never been too fond of this place. Too crowded, too many witless people desperate for attention. Still, it serves its purpose.*

## The Burger Booth

It's not much more than a tent with some flat top grills, coolers, and stools, but it smells like home. In addition to a wide variety of burgers and toppings, it's got chicken and lamb on rice, shish kebabs, hot dogs, and vegetable stir-fry. The husbands who run it have been meaning to move into a permanent location, but people love the booth so much that they've been putting it off.

### The World Beyond

The Smuggler is one of a handful of characters with a link to the world outside the Named City. You may find yourself wondering what it's like out there, but frankly that's one of the few things beyond the scope of this book. If you're still curious, ask the Knight–they long traveled beyond these walls, and could tell you more than I ever could.

## The Smuggler's Booth

You need something from outside the City? Need to avoid attention? Rather keep your reputation intact? The Smuggler's got whatever you need. Weapons, disguises, relics, radioactive waste, encrypted letters, honey, monster blood, anything and everything is for sale here. The Smuggler often hides their booth in narrow alleyways or under stairways branching off from the main Marketplace, but they're also subtle as a bag of chickens so it's typically not difficult finding where they've decided to set up this time.

# The Museum of Arts and Magic (MoAM)

The Museum is a fairly unassuming gray sandstone building from the outside. It's a broad, squat thing, occupying a square of four city blocks just beyond Throne district. The inside, however, is an entirely different story. As a result of its magical nature, the Museum is vastly larger on the inside, forming an unmappable tangle of gorgeous hallways, display chambers, educational facilities, and backrooms. Some of its furthest reaches even cross over into nearby realities, making it a simple, if not easy, means of world-hopping for those without the talent or budget to do so otherwise.

### Hall of Curiosities

A wing of the Museum dedicated to showcasing tools, art pieces, and magical relics taken from cultures across the world. Many of these were uncovered from dungeons by treasure hunters and monster slayers, but it only became evident why after they'd been collected here–magical items naturally generate labyrinths, traps, and monsters around them over the course of centuries, and this process is dramatically accelerated when many artifacts are collected together. As such, much of the Museum has become a patchwork of dungeons in the styles of civilizations across the world. Tours are available, but have a non-insignificant failure rate.

### The Portrait Gallery

This wing of the Museum is taken up almost entirely by portraits, painted gorgeously in a wide variety of styles. Looking closely, you'll find that there's a portrait here for every person in the Named City–including you. In addition to indicating exactly who's in the City at any given time (though, without any proper organization, it's not always easy to track an individual this way), they also update to reflect your general status and mood, and can act as a beacon back to the City for those who've found themselves lost in the Disparateum. If you see someone falling out of their painting, it's common courtesy to help them out. It's possible that damage to a portrait could cause harm to the person it depicts, but nobody has yet risked upsetting the Curator to find out.

### The Tower of Modernity

Near the back of the Museum is a broad, circular wing dedicated to recent innovations in magic and technology. A stairwell winding around the outer edge leads to a long series of sub-floors, each dedicated to the technology of a slightly earlier era. Whenever a new significant innovation is made, the whole tower sinks a level and a new floor is added to the top; the lower floors are deep enough to provide alternate paths into the Undercity. It's unclear how far back the tower goes, as nobody's yet reported finding a floor without another stairway down.

#### The Curator

The Curator resides here, in the Museum. She's usually cloistered away in MoAM's back rooms and secret corridors, but occasionally wanders the halls and discusses exhibits with guests. She's a fifteen-foot-tall angel clad in flowing garments of woven silver, and her hair burns with a light that's hard to look at. She has two pairs of wings, though the bottom leftmost wing is nothing but a ragged stump. It still bleeds, but she pays it no mind. Mop crews follow her around whenever she enters the public areas.

#### New Exhibits

It's worth remembering that the Curator isn't human. She isn't motivated by human desires, and doesn't have human needs. Her sole focus, her single obsession, is adding to the Museum. If you donate something interesting, you'll earn special privileges for life: access to exhibits closed off to the public, secretive events, and libraries full of occult truths. If you bring something that gets her attention, she's willing to bargain for it. And if you ever try to take something from her collection, she'll leverage all her wealth and influence to destroy you.

### Keykeeper's Art
Practitioners carve keyholes into their skull, spine, elbows, kneecaps, and ribs. By inserting keys into specific keyholes, they temporarily gain access to focused and very powerful abilities. However, this specificity is their downfall: while using a technique, their one-track mind leaves them vulnerable.

### Blood-Soaked Fool
A style based around enchanting one's blood, turning it into a sticky, corrosive, and highly flammable substance. Practitioners lacerate their tongue and the inside of their mouth to turn their spit into a deadly weapon, and throw themselves into danger to harm anyone who unknowingly draws their blood.

### Iron Ink Style
A fighting style based around covering one's body in enormous, blocky tattoos. The ink used is enchanted to be almost entirely indestructible, but is also immensely heavy–very few practitioners can cover more than an eighth of their body without their bones shattering under the strain. However, even that much gives one the ability to weather nearly any blow and shatter concrete with a touch.

### The Tower, Inverted
A school of thought that results in a fighting style almost accidentally, practitioners of this style undergo a series of magical procedures to turn their body inside-out. This process inverts the usual relationship of conscious and subconscious mind, giving them control over their mind and body others can only dream of. It also allows them to attack their enemies with a terrifying barrage of bones, veins, and organs.

### Patient Oak
A style laughed at by the other Blood Art Schools for its utter lack of flair and perceived weakness. Practitioners simply commit to mild, regular training with no gimmicks or shortcuts. At the end of two years, they can knock a foe across the City with a light slap, or collapse buildings with a forceful breath.

# The Undercity
Nearly half the City is hidden underground, accessible only to those who know where to look. This section is sparse not from a lack of things to find, but a lack of reliable knowledge about them.

## The Passages
Like many old cities, the City is built atop a complicated network of interconnected vents, tunnels, basements, sewers, and catacombs. If you know the way, you can get from anywhere to anywhere through these tangled passages, but there's always a risk of getting lost or, maybe worse, running into something else down there.

## The Subway
If you prefer a more conventional way to get around than the web of tunnels and sub-basements, the Subway is quick, dirty, and cheap. Buskers provide unmatched entertainment, and the food carts here are incredible. Just make sure to keep up to date on track changes, and double check your map before you get on a train–not every line goes both ways, and some stations are easier to leave than others.

## Parchment Tattoo Parlor
Identity's a slippery thing in the Disparateum. It can be hard to hold onto who you truly are when the context of your reality keeps changing, and that's not even counting the stress of running into other versions of yourself. Tattoos keep people grounded, and nobody does them better than the Scribe. Be warned, though, the parlor's pretty hidden. You'll have to climb down a manhole, navigate a maze of sewer tunnels, and enter an abandoned subway station to get to it. It's usually a good idea to ask someone who's been before to guide you.

## School of Blood Arts
While commonly referred to as a single "school", this actually refers to a series of loosely affiliated groups in the Undercity dedicated to discovering new combat styles. The practitioners here are constantly innovating, doing everything from drilling keyholes into their bones to cursing their blood to turning their entire body inside out to get an edge in combat. Some of these innovations have made their way to the surface, but the most potent are kept closely guarded here.

## Corpse of the Moldering God
Deep below the City lies its ancient master, a pale and eyeless god. The god's tangled body fills a cathedral-like chamber whose doors were sealed off ages ago. Entering isn't recommended purely out of respect for the dead. Leave it be.

# Ritual of Return

## For Resuming Our Tale Where We Left Off

The candles are lit. The instrument is polished and tuned. The stage is properly set.
**[To the Knight:]** Where's your path leading you, and where should we begin today?

The knife is drawn. The first note is played. The actors take their places.
**[To the Thief:]** What problems have we left unresolved, and which of them is looming over us now?

The words are spoken. The song begins. The curtain rises.
**[To the Seer:]** How does this scene begin, and what's about to happen?

The Disparateum continues telling its favorite story.

*Patterns shape this world, and shape us inside it. They define our stories, our memories, our interactions with each other. I never saw the full shape of it until I found the Book. Now I understand.*

# The Dreaming

## Where All Sleeping Souls Reside, Living The Impossible Until Morning

### The Dreaming
**Trait– Layer**
The City's subconscious. Opens when the Knight falls asleep for the first time, and is accessible through a quiet night's rest.

**[Recover traits by:]** Using them in impossible or unimaginable ways, or challenging your preconceived notions about them.

### Unstable
**Trait**
The Dreaming is a malleable place, constantly reshaping itself as dreamers pass through it.

**[1 token:]** Do the impossible.

### Inconsequential
**Trait**
Nothing done on this layer can materially influence any other layer, and nothing but memories can cross its barriers.

**[1 token:]** Deem something irrelevant.

**[0 tokens:]** Wake up.

*Then what's the point?*

**The people of the City are united through dream.** Everyone who falls asleep inside its walls are brought to the same collective dreamscape, and are met with a beautiful and distorted version of the waking world. Here, floating through the air is as easy as walking, entire structures can be manifested with a thought, and dying is just another way to wake up.

The Dreaming also serves as a means of reaching deeper, stranger parts of the mind. If you venture down those paths, make sure to take stock of who you are first–you don't want to come back with any important pieces missing or changed.

# Throne District

Towering above the Dreaming sits the Slumbering God, master of two worlds. While its body lies dead deep under the Named City, here it lingers for at least a moment longer. The dreamers residing here either pay it no mind or openly celebrate it, though it's unclear whether the gaunt, haggard thing is even aware of this.

### The Lantern Procession

All throughout the City, colorful glass baubles drift through the air, illuminated from within. It's said that there's one for each dreamer, and that if you can identify and capture yours you'll find your deepest wish fulfilled. This theory is rarely tested, however, as they're evasive enough that some people think they're intelligent. And of course, how would you even know one was yours in the first place?

### The Wandering Park

The Dreaming version of the Park also weaves its way through other neighborhoods, but does so much more intensely. Paths of greenery worm their way through buildings, climb up walls, and twist into the Undercity. Statues and monuments are more common here, but less recognizable. Many are faceless or abstract, and the few with plaques have distorted or shifting text engraved into them. Children run and play, tumbling through the air as they learn to fly after each other. Duels aren't uncommon in the Park, as the Dreaming makes for an ideal means to test one's skills and recover one's honor without risking death in the waking world.

### The Smoldering Ruin

From anywhere in the City, you can see a faint plume of smoke. Following it to its origin brings you to a single lot filled with the charred remains of a stately building. In the wreckage, you can make out part of what used to be a stage.

### The Nightclub

The dream version of Parlor Tricks opens up its back doors, revealing a private club for practitioners of strange and mystic arts. There are exactly two hundred invitations in, so getting one as a gift is a high honor–and those carrying tickets are subject to no little jealousy. It's unclear what happens inside, but stories tell of members casually discussing secrets of the universe over strange, unwinnable games.

### Glasshall

Music suffuses the Dreaming, which puts Glasshall in an interesting spot: here, it's the only place with silence. You'll typically find a few dozen people scattered throughout the spacious seating area here. Most are just sitting quietly, though every once in a while someone'll climb up on stage, speak words they'd struggle to otherwise, and then step back into the comfortable silence. It's a kind place, free of judgment.

*I have my own place to think... a little apartment, near the top of the Throne. If I've passed this book onto you, I suggest you find a similar place.*

*You'll need a place safely away from our enemies.*

### Law & Order

The Named City doesn't have a government, and as such it doesn't have any of the structures of political control you'd expect from one. There's no one to enforce the laws because there are no laws, simply the trust placed on you by others and the consequences of violating that trust. The people of the City provide for the needs of those around them, and stand unified against those who would threaten that. As such, even the killers and thieves that make up the City's underbelly hold themselves to strict codes of conduct, and readily dedicate themselves to the betterment of their home.

# The Silver Market

Fewer people run booths in the Dreaming's Silver Market, but what it lacks in the bustle of its daytime counterpart it more than makes up for in the strange wares available. Just remember that, even in dreams, an offer that seems too good to be true usually is.

## The Landscapist's Booth

The Landscapist is still set up at her easel, still painting away. Here, though, her paintings are abstract splashes of color and shapes. She beckons you closer, then waves a tattooed arm in front of the canvasses. As it passes over, you see the city change: the painting seems to filter through the tattoo, and you see as the skyline is brought to life in vibrant, unnatural colors. Other things change, too: buildings appear and disappear, esoteric structures loom in the distance, inhuman creatures wander the streets. Are these other worlds? She merely smiles at you.

### Currency in the Dreaming

Some people still trade in the Dreaming, though since objects can't be taken in or out, bartering for favors and information is much more common. Some things can only exist in the Dreaming, and some folk do value collecting them, so that's something to keep an eye out for. The Dreaming is also a place where decisions are often made based on games, gambles, and contests of wits. If you can't get someone to budge on a trade, try something a little trickier and a lot more fun.

## The Smuggler's Booth

You won't find the Smuggler's booth at the Silver Market, but it's included here as a courtesy. They put considerably more effort into hiding it here in the Dreaming, so be prepared to explore rooftops, sewers, and abandoned warehouses. The goods are worth it, though: here, the Smuggler sells memories. They're one of the only things you can bring back to the City, after all. Just, don't ask whose memories they are, they won't tell you anyway.

## The Bandstand

In a world permeated with music, what's the role of the musician? Here, musicians don't create music, but play along with it, shape it, teach and learn from it. You can always tell when someone's playing at the Silver Market, because the whole of the Dreaming sways in time.

## The Bookseller's Booth

A young man in oversized circular glasses runs this booth, surrounded by piles of books tall enough to hide him from most angles. Reading the books themselves is… difficult. The words swim around, fade in and out, melt and reform, and if you stare at them too long it feels like the book is drawing you into it–until the Bookseller clears his throat and you snap out of it. He doesn't accept anything for the books, merely talking with prospective customers until he has an idea of what they're looking for and then plucks a single volume from the stacks. In the morning when you wake, you'll find the book under your pillow, neatly wrapped in brown paper and twine. And when you read it, you get the sense again that it's pulling you in.

# The Lost Wing

Sunken into the ground lies a shattered and collapsed section of the MoAM. Once, this was a high-security wing dedicated to cursed and hostile magical relics. Now it's nothing but a blight on the City. The streets here are often empty.

## The Death Ward

A section of the museum dedicated to all the ways humanity has sought immortality through magic. A few extremely powerful objects were once held here–petrified souls and fingers of gods–and their auras have thoroughly corrupted this place. Scavengers try to recover talismans to turn away disease or twist luck in their favor, and all of them come out changed. If you find a friend acting out of character, seek help, don't meet their eyes, and whatever you do don't let them wake up.

## The Menagerie

For a time the Curator collected monsters too. That ended with whatever catastrophe dragged the Lost Wing into the Dreaming. Some were scattered through other neighborhoods, but most remained inside the broken Museum, staking out territories and hiding away from the confusing world outside. They're too real for this place, which makes it nearly impossible for them to feed or rest, and without a sleeping body to wake up into they're unable to die. Research is being done into how to best help them, but progress is slow. In the meantime, give them space. Leave them be.

### An Odd Crowd

Outside the Museum, a group of unlikely creatures have formed a "pack" of sorts, led by a one-eyed cockatrice. They wander the Dreaming, looking for anything substantial enough to feed them. They won't go out of their way to attack dreamers, but they're easily scared and will lash out if cornered. Some residents have taken to leaving out particularly vivid memories of food for them, which seems to help a bit.

## Hall of Immersive Art

This exhibit used to be in the Portrait Gallery's wing, but was shut down after one too many incidents of art pieces permanently altering museum-goers in irreversible ways. The pieces here range from instructions for a gesture that makes you forget who you are, to a shard of mirrored glass that inverts your fears and desires while held, to a stuffed teddy bear that's convinced it's got the soul of the first museum-goer to touch it trapped inside. Eventually these exhibits were all scrapped, and got locked away in a dusty corner of this wing until the disaster that shunted it into the Dreaming. Most of the collection is intact, but a few pieces have since gone missing.

*Dangerous things indeed…*
*but potentially useful.*
*Can they be taken from the Dreaming?*
*Requires further research.*

# The Undercity

The Undercity was already a pain to navigate, but here it's nothing but a free-associative nightmare. It's impossible to navigate, so don't bother–if you find yourself here, just trust your gut and keep an eye out for exits.

## The Cathedral

In the darkest corners of the Undercity, the secretive Godeaters meet to plot the destruction of the Named City and all its residents. To their chagrin, the residents themselves see this as a bit of charming local flavor, and nothing they do ever seems to establish them as a real threat. Don't get me wrong, they can be sincerely dangerous, but their track record is so full of embarrassments that if they try to coerce or intimidate you, it's probably best to just walk away.

## The Subway

No trains run in the Dreaming, so if you want to get anywhere through here you'll be walking through the tunnels. It's worth it, though, even if you don't have anywhere to be. Graffiti from the waking City takes on new life here, each piece illuminated faintly with neon colors as it twists and grows across the walls. Tags curl and twist like smoke, stencils move with stop-motion jerkiness, and memorials smile down on those who come to visit.

## The Fairy Circle

At the base of a steep staircase is a dark, nearly empty room. The open space is dominated by a ring, fifteen feet across, of faintly phosphorescent mushrooms of various colors. Sitting in the middle of the circle is a vending machine. You can see the plug just lying on the floor, but it's lit up and perfectly functional. I'd add more, but I'm honestly just as lost as you are. Maybe don't drink anything from it, though.

## The Vault

The lowest level of the Dreaming's Undercity is marked with a circular vault door. It's set into the ground at a shallow angle, about a quarter of a mile across, and covered in about four hundred thousand locks in all shapes and sizes. Despite the Dreaming having no discernible temperature anywhere else, here, in the Vault's chamber, it's cold. The locks and the spiderweb of chains connecting them seem perfectly ordinary, but the moment you touch the Vault door itself you're violently torn from the Dreaming. You wake up, screaming and shaking, with your fingernails covered in ice. It takes you a moment to remember anything but the cold.

### Navigating the Dreaming

Even ignoring that you can fly in the Dreaming, getting around is easy. No travel times, no need for exact routes, just set off and there you are! Well, I say easy, and that's mostly true, but we should break that down. It's easy to leave places, for sure. It's easy to arrive at other places after you leave. It's not exactly easy to get somewhere specific, though. If you're an experienced dreamer, and you know the place you're heading well, and you're willing to try a few times… well, you'll probably be fine. And even if not, you'll never wind up somewhere boring.

# Ritual of Sleep

## For Crossing the First of Many Thresholds

Night falls, and the Named City quiets down. Shades are drawn, books are bookmarked, and lights are extinguished.
**[To Each Sleeper, In Turn:]** Where are you? What's your nightly ritual? How do you drift off?

The Knight doesn't immediately notice the transition into dream. Instead, colors seem to become more vibrant, the walls seem to sway gently, and the quiet murmur of the City gives way to the songs of the Dreaming.
**[To the Knight:]** How do you feel? What do you notice first? Where do you go first?

**[To Each Other Dreamer, In Turn:]** Where are you now? What do you do differently in the Dreaming? When do you cross paths with the Knight again?

# Traits

In addition to your role, you'll have a set of traits that flesh out your character with skills, goals, and obstacles. There's five different kinds of traits: roles, skills, motivations, bonds, and destinies. There's only three roles (the Knight, Thief, and Seer) but the other types describe broad categories that can be filled out however you want. There's a handful of examples listed in the sidebar, though don't be afraid to experiment–if you want a skill that lets you walk through walls, a bond that connects you to an enchanted lantern, or a destiny that binds you to your family's cycle of revenge, go ahead!

To make a player character, take a sheet divided into eight sections. Put your name and role in the top left section, then place three other traits in three other sections of your sheet. Distribute seven ranks among your rank and traits so that each has at least one rank and at most four. PCs can pick up new traits in their adventures, as long as they have more empty sections on their character sheet.

The Tower doesn't have traits, because they're not playing a single character. They can, however, introduce non-player characters at any time. NPCs behave just like PCs, except they don't have a role and use half a sheet, so they're capped at a maximum of four traits. NPCs can be created with any number and arrangement of ranks, and don't tend to rank up.

## Tokens

Each trait has a pool of tokens associated with it. Players can spend a token from one of those pools to take meaningful, impactful action using or relating to that trait. You can also spend a token to fight the action of another, but no amount of effort can negate the effect: the best you can do is change, twist, or redirect it.

## Ranks

When you begin a session, each trait starts with tokens equal to its rank. A trait's rank ranges from one to four, and traits gain a rank whenever a character's understanding or relationship with that trait broadens. This is purposely vague, as (outside of some specific effects) traits will only ever gain ranks when their player feels it's appropriate.

Some traits have properties that kick in at certain ranks. You don't need to use tokens to bring these properties up during a game, they're considered to be true unless that character's player rejects or changes them. Roles have one of these at each rank, but other traits only need one or two to really shine.

## Recovery

Each layer gives a way for characters to "recover" their traits by taking some action connected to that trait. When that happens, you reset the trait to having tokens equal to its rank. Recovering traits often involve doing something that creates drama or causes problems, though of course there are exceptions. Regardless, these should always be *significant* in some way. If a trait recovery feels bland or routine, think about ways to increase the stakes or tie it into the story at hand.

### Oil Painting
**Trait– Skill**
Your floors are covered in drying paintings, and your walls with messy pencil sketches.

**Rank Two:** You've developed a style nobody can replicate. What makes it so distinct?
**Rank Three:** You've made a name for yourself, and people recognize you in the street. A student arrives on your doorstep one day, asking to be taught.

### Driven by Glory
**Trait– Motivation**
You will rise above. You will be anointed with a crown of gold and flame, and your actions will echo through history.

**Rank One:** Your journey begins. Declare what incredible thing you'll be known for soon.
**Rank Four:** You've reached the first of many pinnacles. What do you understand about yourself that you didn't before?

### Tense Rivalry
**Trait– Bond**
Wherever you go… they're there. Always one step ahead, always interfering. You wouldn't have it any other way.

**Rank Two:** What side of yourself *only* comes to light when up against your rival?
**Rank Four:** What would happen to you if this rivalry came to an end?

### Chased by Catastrophe
**Trait– Destiny**
You've carried this mark for a long time, and you know what it means- disaster is coming for you, and when it arrives it'll be on your hands.

**Rank Three:** Your downfall is so close, you can smell it. Everything sags towards disaster. When the moment comes, rank up.
**Rank Four:** It's here. When the catastrophe passes, cut this trait off your sheet.

# WORLD–HOPPING

In the course of your adventures, you'll find yourself frequently crossing thresholds into new worlds. The Disparateum is multifaceted and interconnected, and there's always an open door if you know where to look.

*Good to know the pages aren't missing, but I wonder why they've been rearranged. I suspect the Book's been somehow altered.*

*But by who?*

*And to what end?*

### LAYER TRAITS

Worlds are quite a bit like people, and can have traits too. Layer traits set rules and expectations for how things happen on that layer, and can give everyone on that layer new ways to spend their tokens. You can spend tokens from any of your traits to take layer actions, and those actions don't need to be related to the trait you're using. Layer traits don't have ranks.

### OPENING PATHS

Most layers have specific requirements for accessing them for the first time, but once a layer's been opened up it becomes much easier to access. A layer is described as "open" when the conditions needed to reach it have been met, and an open layer is accessible through a particular set of actions or approaches.

### APPLYING LAYERS

As you travel along your path through the Disparateum, you'll often find yourself existing in the context of more than one layer at once. After all, *how* you arrived where you are is often just as important as the place itself. Reaching a layer through your dreams will be a vastly different experience to being pulled into a book, and both will be entirely unlike crossing through a doorway that vanishes behind you.

Whenever we travel to a new layer, we represent this bleed-through by placing the new layer's traits over the previous one's (keeping the same orientation–see Figure 2). Since these layers are each laid out on a two-by-two grid, there'll be four traits on top at any given time, but since many layers have gaps in their layout, some pieces of the lower layers will seep through. The same layer may be represented multiple times in a single journey, but don't worry about that, it rarely matters. If you retrace your steps and leave a layer the same way you entered it, remove that topmost layer instead.

**FIGURE 2**
Two layers in a stack.

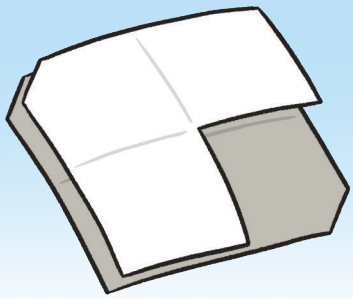

**THOUGHTS ON CROSSROADS**

These rules are phrased in such a way that they assume all players are tracing the same general path through the Disparateum: everyone's usually on the same layer, and everyone's usually doing the same things to move from one to another. This isn't always true, though! You may be playing a game where it's common for players to chart their own routes, only occasionally crossing paths in the same layer and rarely arriving there in the same way. That's not a problem, just make sure everyone's keeping track of their own path with their own stack of layers, and that you're not driving the Tower too crazy with it.

# RITUALS

Rituals are formalized moments, structures that click into the natural flow of play and send us off in a direction. Some rituals exist for specific purposes: the Ritual of Beginning gives us a place to begin our exploration of the Disparateum, and the Ritual of Return gives us a jumping-off point to resume the game at the beginning of a session. Others exist to shape certain scenes, explore certain concepts, or formalize certain actions. Whenever a ritual feels appropriate to invoke, go for it!

Rituals don't have to be completed in one go. If a scene wants to sit squarely in the middle of a ritual, let it. Explore it, and then return to the ritual when you're ready. Think of it like a moment of dialog in the middle of a musical number.

# The Narrative

## Where Stories Come Alive and Grow Through Their Telling

### The Narrative
**Trait– Layer**
The birthplace of myths and legends. Opens when you lose yourself in a story, and is accessible through a well-told tale.

**[Recover traits by:]** Using them to play into tropes, or to push the narrative forward.

### Transient
**Trait**
This place only lasts as long as the story being told, and when it finishes it'll send us back to where we came from.

**[1 Token:]** Skip to the next important part.

### Kayfabe
**Trait**
You are not yourself here. When you enter the Narrative, you take on a role in the story.

**[1 Token:]** Cover up one of your traits with one of your role's.

**[3 Tokens:]** Take on the role of a different character in the story.

**The Disparateum is built on a foundation of stories.** Stories amaze us, entertain us, give us new perspectives, and give us insight into who we are. They're bridges into others' lives, currencies that doesn't deplete in the spending, memories of what could be.

Here, stories are material, their rules and patterns as unshakable as our physics. This layer rises up from the depths of the Disparateum whenever a story begins, and vanishes again when it ends. Travelers here take on the roles of characters in that story, playing along with the narrative as events unfold. But stories are ever-evolving things, and always change in the retelling. Just because you're bound to a particular story doesn't mean you can't make things interesting.

# Ritual of Storytelling

## For Losing Yourself in a Tale Well-Told

All gather around, and we begin to listen.
**[To the Storyteller:]** What kind of story are you telling?

**[To the Knight, if present, else the Storyteller:]** Who is our protagonist, and what are they struggling with when the story begins?

**[To the Seer, if present, else the Storyteller:]** Who is allied to the protagonist, and what are they doing to help?

**[To the Thief, if present, else the Storyteller:]** Who is our antagonist, and what have they just accomplished?

**[To the Storyteller:]** Where do we begin our story?

# FREQUENT GENRES

There are an uncountable number of stories, and no shortage of mouths to tell them and hands to record them. As much as I'd like to show you every single one, however, our time here is limited. Instead, here's a brief and shallow list of genres that're popular right now in the Named City, that you're likely to run into.

### HIGH FANTASY

Tales of brave warriors, dashing rogues, clever wizards, and proud kings. Often set in grassy, sun-drenched kingdoms full of strange creatures and epic quests. If you want to blend in, practice a dramatic tone of voice and olde-tymey speech patterns. Tends to overlap with Historical Fiction.

### ROMANCE

Ranging from simple stories of true love to intricate webs of intrigue and betrayal, the Romance genre is passionate, diverse, and thriving. Stories from the Named City tend to feature a great number of mistaken identities, alternate selves and swapped bodies–all things known to happen to travelers of the Disparateum, though of course with the details… embellished, somewhat.

### SCIENCE FICTION

The future, where boxy machines are used to travel to worlds yet unimagined, where robots question what it means to be alive, and where the secrets of magic have been thoroughly uncovered. These stories tend to fall into two camps: *hard* SF, which tends to limit itself to a single layer and all that we know is possible there, and *soft* SF, which allows itself to go wherever the story demands at the cost of being somewhat less grounded for the average reader.

### HISTORICAL FICTION

Stories, often with a limited scope and a strong character focus, set during particularly vibrant moments in history. Expect to encounter a lot of elaborate outfits and long scenes focused on particular bits of historical minutiae. Tends to be set outside the Named City, as stories set during the City's past fall more in line with High Fantasy.

*When I have time to read fiction, I tend towards Noir.*

*There's just something about lone heroes fighting a one-man battle against the corruption threatening to swallow their world.*

*Another way I knew I was chosen for this, I suppose.*

### NOIR

Mystery stories are always thrilling, and what better than a mystery story that *knows* it's a mystery story? These are stark, intense stories about obsession, trauma, and self-destruction, often coming face to face with the dark underbelly of their setting and indulging in all that comes with that. The Investigator's Guild argues that these stories are outlandish and paint an incorrect picture of what they do, but we all know they secretly eat it up.

### HORROR

Horror stories thrive on the unknown, and those living alongside the Disparateum know the unknown like a friendly neighbor. Horror offers insight in a way no other genre does, and as such has persisted as one of the most ancient and storied genres. Recently, a craze of unverifiable "based on real events" stories have swept the Named City, and anxiety has begun to spread about the effect they're having on the Dreaming.

# The Council of Dragons

In the silence between words, the space beyond stories, the Council of Dragons meets to draw lines between genres and claim stories for their own. These meetings are deeply political affairs, involving brief alliances and long-held rivalries. New dragons appear whenever an influential story births a new genre, and regularly drive the Council into a frenzy of alliances and betrayals.

*Hm. I find this distasteful.*

*All that power, and they have no better use for it than hoarding and squabbling?*

*But, I suppose as long as they keep to their little corner, they're of no concern.*

### Paunth Aeon, sword-bearing dragon of Fantasy

Paunth is a proud, regal dragon, always fighting for what he believes in and never backing down from a challenge. While noble, this all makes Paunth an ideal tool for the more subtle and conniving members of the Council. He keeps a glittering horde of stories that the others covet, but to this day have been unable to find; some suspect he got help from an outside force in hiding them away, but despite the Council's best efforts this mysterious collaborator hasn't been found.

### Slaubern, silk-draped dragon of Romance

One of the oldest and wisest dragons on the Council, Slaubern is famous for their generosity. While the other dragons fight over every story that even vaguely approaches their genre, Slaubern only claims stories dedicated fully to Romance. Few realize the full consequences of this, however; with so many Romance tropes ending up in other genres, Slaubern has fingers in nearly every story told. Should they bring that power to bear, they could destroy the Council with ease.

### New Dragons

A new dragon is born whenever a story becomes influential enough to create a genre of its own, and they can only die when all their stories have been forgotten. Therefore, the dragons' hoards of stories do more than stoke their egos–they're what keep them alive. Newborn dragons are desperate to get their claws on a hoard of their own, which drives them immediately into conflict with the rest of the Council. The oldest and most established dragons are skilled at turning that conflict to their own gain.

### Sai Brunetrix, artificial dragon of Science Fiction

Sai is a true genius, weaving plans and strategies that far outshine those of the other dragons. She has so many brilliant plans, in fact, that she often struggles to recall which ones are in motion, and how far along they are. Don't dismiss her, though–in her moments of clarity, there's nobody more dangerous or better prepared.

*Then again, if one were to make a dragon…*

### Outhantickity, regal dragon of Historical Fiction

Outhantickity presents herself as a softer, more soft-spoken counterpart to Paunth, but under her proper demeanor lies a very different heart. Outhantickity is ruthless, cutthroat, and bloodthirsty. She fears losing her high placement in the Council, and so works tirelessly to manipulate and sabotage the others. Many times, others have plotted to destroy her, only for a gentle word or fragrant letter to turn the conspirators against each other at the last moment.

### Ghemsue, hard-smoking dragon of Noir

Ghemsue commonly plays the part of mediator and tiebreaker at the Council, and few of the others can hold up to xir scrutiny for long. This would make xem an excellent ally, if xe was interested in playing the game. Ghemsue's content with xir position, rarely fights to take ownership of stories on xir genre's fringes, and would be happy to never go to another one of these gatherings.

### Perrano Morl, smiling dragon of Horror

Morl is a stranger to these gatherings, rarely arriving to them and often staying quiet and distant when he does. That's not to say he's uninterested, however: he simply does most of his scheming from the margins, only acting directly to put the final nail in the coffin. As such, his arrival at the Council is treated as a bad omen.

# The Network

## Where Technology Joyously Carves Out New Possibilities for Itself

### The Network
**Trait– Layer**
The City-wide web. Opens when you discover the potential of technology, and accessible through any internet-connected machine.

**[Recover traits by:]** Using them to find community, or by uncovering strange knowledge related to them.

### Symbolic
**Trait**
Nothing that exists in the Network is bound by its physical form, so people and places here are represented as abstract digital constructs.

**[1 Token:]** Change your digital form to anything you can imagine.

### Growing
**Trait**
There's always space to grow, and always something to add.

**[3 Tokens:]** Establish your own corner of the Network.

**[1 Tokens:]** Introduce someone to your community, or meet someone new through it.

*Ah yes, I spent plenty of time online in my youth. Of course, the Disparateum offers a more hands-on approach.*

**The Network is young, but it's growing.** New pathways spread like lichen across a tapestry of information. New tools and systems are emerging every day, promising to revolutionize the way we relate to the worlds around us. And not all those promises are baseless- while it'll still be some time before the internet is part of everyday life, the early adopters can tell this is something altogether unique.

As a layer, the Network is elaborate and diverse. Each website is like its own little world, all tied into each other through an elaborate system of connections. When going from one site to another, it's wise to make a lot of short jumps rather than a single long journey. Dangers lurk beyond what your monitor can display.

# The Gateway

The Named City's internet is still young enough that most people are only vaguely aware of it, and sites are passed around almost entirely by word of mouth. Even still, there's communities online that've attracted enough attention that it's assumed anyone who's been on a computer has heard of them.

### Memesis.nct

Whenever people find a new way to communicate, the first thing they do is figure out how to make jokes with it. Memes are a mainstay of the Network, and while you'll have to explore some real weird corners to get the best ones, many perfectly fine memes get collected here. The Memesis comments sections have a reputation for being hostile and combative, but the reality is that it's a quite healthy and open community that just occasionally gets into long-winded arguments over the minutiae of memecraft.

### theArchive.gno

An enormous digital collection of encyclopedia-style entries, research essays, and scanned books and other preserved media. Accepts submissions from anyone, but all new content goes through a vetting process to ensure it's properly preserved, sourced, and tagged. Even so, some things slip through the cracks or get stuck in pending approval, so taking the time to dig into the darker corners of the Archive can reveal some really fascinating stuff.

### Ignition_Manual.kln/forum/

The biggest pyromancy forum on the internet, the IMF was created to be a resource where experienced mages could share resources and advice with the next generation. It remained as such for approximately two weeks, before a three-hundred-page thread over whether magmakinesis should count as pyromancy shattered the community into dozens of warring factions, who then splintered further as new forms of discourse were discovered. Several topics (including reagent sourcing, facial hair, and ever-burning flames) have caused such a stir that even mentioning them can get you slapped with a month-long suspension.

### PanelShow.cob

A site dedicated to showcasing webcomics, the hot new online trend. Webcomics are typically hosted on personal sites, but Panel Show lets creators share a blurb and a couple sample pages to draw people in. An involved tagging system helps readers find new comics to check out, and is facilitating a whole host of hilariously specific new genres. There's even an official podcast, where the moderators of the site bring on a couple new creators to talk about their work and give tips to people just starting out. It's thrilling, getting to see a medium come together like this.

### SiliconMarket.nct

You can find just about anything in the Named City, but often that requires a lot of running around, haggling, dealing with other people, et cetera et cetera. The Silicon Market is an easy way to buy and sell things without all that inconvenience, at the cost of sometimes not getting quite what you thought, and other times getting much more than you bargained for.

#### Domain Extensions

Here's a couple commonly-used domain extensions, and what they tend to indicate.

**.nct** extensions are hosted in the Named City, and are notable for often having unique features if accessed in the Dreaming.

**.gno** extensions (pronounced like "naa") indicate an educational or informative source, often cross-referenced by an institute of seers and scholars.

**.cob** (Collective Organized Board) sites are hosted decentrally, meaning that a group of users collectively host and maintain the site rather than any one authority.

#### A Magical Community

Much of the Network's current core userbase are mages, as they tend to spend a lot of time working alone at home and the internet gives them a convenient way to research and socialize. As a result, most of the major communities have a hard sorcerous bent. If you spend any significant amount of time online, you'll likely pick up some basic concepts and phrases, though actual practical magic is still something that takes time and hard work.

# THE BACKDOORS

Most of the Network is here, on the fringes: sites that haven't gathered as much attention, sites that are partially or entirely obscured, sites that are more of a novelty than anything else. It's the nature of the internet that most people only ever experience the shallow end, and that's great because it means there's always something incredible waiting to be found.

### TRUTHSEEKERS.NCT

A fun little website that updates every few months with a handful of clues to a new ARG (or alternate-reality game). Several forums are dedicated to piecing these mysteries together, and often compete with each other to see who can solve them fastest. The site is well known in ARG communities for its quality puzzle design, interesting themes, and for occasionally revealing actual conspiracies.

### ADVENTURERS_UNION.GNO

A recruitment site for a group of adventurers that boldly journey into the furthest reaches of the Disparateum and record what they find. Those that return often submit treasure troves of information to the Archive, and checking their recent excursions page is a great way to see what Archive articles are about to see major revisions. Of course, their current findings aren't nearly as broad or as deep as those in the book you're holding. Still, nice effort.

*Again, the Book provides strange commentary. I refuse to believe that these childish jabs are the remarks of the same creator who made this world.*

*Why would someone add this, though?*

### WITCH.IO

A storefront for independently-designed rituals, which has garnered an unexpected but not out of place tabletop gaming community. Naturally, the longer the two coexist the more the lines have been blurred, to the point now that most professional witches have polyhedral dice sets in their offices and most hobbyist gamers have accidentally brought to life at least one household appliance.

### S/ASH.COB

A hacker forum, accessible only through machines that have been infected with a very particular virus. This virus seeks out people first learning how to code and attempts to invade their system, obviously at first and then with increasingly clever techniques. Members of the forum are awarded a badge next to their username indicating how long they were able to hold it off.

### ‼–TIME_WINDS–‼.THEORY.GNO

This site is host to an enormous, poorly written and inconsistently formatted ramble on the nature of time. It posits that time is neither linear nor causal, and instead moves in fits and starts backwards and forwards in a strange rhythm. Several elaborate diagrams seem to show this happening on particular days, with some hours happening repeatedly and others not existing at all. It's unclear what, if anything, the author believes happens during the time that doesn't exist. Usually these kinds of sites would be quickly disproven and stripped of their .gno extension, but everyone who's attempted that here has gotten so turned around that they quit.

# THE SPIDER'S NEST

Whenever a computer sends or requests information, a connection must be made. These connections are precise, delicate, and elaborate. Fledgling hackers tend to assume these threads are the results of the computers themselves, perhaps sending signals through the air to establish bonds with each other. Then they peek just outside their monitor's precisely curated window into the Network, and they see the spiders.

## THE BROOD

An endless swarm of digital spiders crawl through the virtual un-space between websites, tending to the health of the Network's enormous system of connections. Well-worn threads are reinforced and built off of, while unused connections are trimmed and repurposed. Packets are shepherded to their proper location, and defended from outside interference. New sites are seamlessly built into the system as though they had always been planned for. They keep the Network running smoothly, and disruptions to their order are brief and rare.

## THE WEAVER WIDOW

At the heart of the internet sits the Widow, a massive spider with eight heads and ten thousand legs. Her web is a massive tesseract that stretches to the furthest corners of the Network. Here she spins the threads of code that make up this layer's foundations. Her Brood acts out her will across the web, working tirelessly to ensure the Network is constantly expanding its range of influence and fighting off threats to its beautiful geometry.

## [ NULL ].COB

Even here, where human interference is hunted down and removed, people carve out spaces for themselves. If you want to learn secrets others would rather forget, barter for objects that make the impossible trivial, or get in touch with people who don't want to be found, you'll have to trek out to the tattered far reaches of the Network.

### EXPLORING THE NETWORK

Anyone can visit a website, but only travelers of the Disparateum know what it's like to wander the Network. On this layer, each site and device is a physical location, and the only way to get around is across shaking bridges made of connection threads. There's no easier way to slip past security, get access to valuable information, or trace a connection to its source–as long as you're willing to risk your trip across those narrow bridges being sabotaged by a disgruntled spider or some hostile malware.

# Ritual of Bloodshed

## For Coming to Terms with What You've Done

Blood runs through the cracks of the sidewalk and seeps into the bones of the City. Your hands are stained with it. The silence buzzes.

**[To all but the killer:]** What have we gained? Before answering, consider silently for two minutes.

**[To all but the killer:]** What have we lost? Before answering, consider silently for two minutes.

**[To the killer:]** Was it worth it? Before and after answering, consider silently for two minutes.

# REFLECTIONS OF THE DREAMING

For every dream, a nightmare. The Dreaming, for all its chaos and unpredictability, is a cultivated garden. The Named City's dreamers add wonders and cut away horrors. But nothing is ever truly lost, and many of those horrors end up here. Or, are the wonders of the Dreaming the things the dreamers here rejected?

### LANTERNFLY SWARM

Clusters of rainbow lights in the night sky aren't nearly as comforting in the Reflection. Lanternflies are enormous, dream-sucking insects about a forearm's-length across, with shells made of multicolored glass shards. Their abdomens glow when they've recently fed, but no lanternfly is ever sated. They most frequently attack lone dreamers, but will go after crowds if sufficiently hungry, angry, or bold.

### GLASSTOWER

Here, Glassfall is a labyrinthine spire of windows and mirrors. Shadows pass over the glass here from people long-gone, and distorted echoes linger behind every surface. It's said that you can make doorways to other moments in time if you break the right piece of glass at the right moment, but nobody wants to risk the misfortune that could come from that. And even if you did, how would you know which one to break?

### THE LAIR

In the deepest recesses of the Reflection, where no mirror-light threatens to enforce the nature of your Named City, your Reflection readies itself for what it has to do. From the moment you killed a fragment of yourself, your Reflection has hidden itself here as it prepares to take revenge. You've broken a sacred pact between selves. You've crossed a line that can never be undone, and now you–and anyone who allies themselves with you–has to pay the price.

### PARCHMENT TATTOO PARLOR

The path to the tattoo parlor is changed. The Undercity is twisted here, full of collapsed rooms, labyrinthine hallways, and sudden drops into darkness. The abandoned subway station is changed, too. It's sealed off and rigged with traps, made to be nearly impossible to reach from the outside. The parlor itself, though, is identical. There doesn't seem to be anyone here right now, but the chairs, the peeling posters, the… wait, in the corner there. What is that? …Wait, is that really a [redacted]? How'd the Scribe get his hands on that?

Is the Book being censored? This is an affront! Who would do this, and why?

**REFLECTIONS OF REFLECTIONS**
There is a Reflection of every layer, not just the two described here. Each layer's Reflection behaves as a person's does–it takes that layer's nature and twists it into something wholly alien. Whatever that layer rewards, its Reflection punishes. Whatever that layer shuns, its Reflection welcomes. Be careful when traveling the Disparateum on the other side of the mirror. It's not like our own.

# REFLECTIONS OF THE NAMED CITY

The Reflection is a strange place. Mirrors pin certain locations in place, forcing them to conform to the other side of the glass, but anything beyond those boundaries is allowed to become whatever it wants, and this layer wants to be something wholly alien to the City it's chained to.

## THE TARNISHED MARKET

The Reflection's market is ragged and torn, with monstrous vendors selling hostile wares for vicious prices. There, a stall filled with golden trinkets that whisper hoarsely. There, a stall that offers caged beasts in exchange for handfuls of severed fingers. There, a stall selling knives that can carve pockmarks in causality. This isn't a place for getting anything you could ever want. This is a place for the things others would prefer you not have.

## THE LABYRINTH WOOD

Snaking through the Reflection is a dark, impenetrable forest. Its roots dig through the street's foundations, and its branches reach through windows and claw at doors. It's populated by fears and nightmares, all the things that you see behind you in the mirror but are gone when you turn around.

## THE STATUE GARDEN

Statues litter the Reflection. Some are intact with only mild wear, but most are broken and scattered about. The Wood has the most, but nowhere's free of them. They've got different scales, too: some are life-sized, others slightly exaggerated, and a few tower over buildings or lie crumbling across entire neighborhoods. If you look closely, you'll inevitably find some that resemble you or people you know, posed in a way that feels indescribably familiar. Of course, not many people spend so much time looking at their faces, on account of the eyes.

## MOAM

Here, the Museum's been sealed up for decades. Barricades wrapped in webs of chains cover every entrance and window, and the streets around it are fully abandoned. Sometimes, from outside, you can hear something enormous moving around inside, but other than that it's entirely silent. Some rare fools have tried to venture inside to claim the treasures supposedly trapped inside, but none ever come out.

## THE THEATER

There is no Theater in the Reflection.

## THE SIMPERING GOD

Deep below the Reflection lies its ancient master, an eyeless and smiling god. The god's tangled body is trapped within a cathedral-like cage and sealed with miles-long lengths of chain, but its constant laughter echoes through the tunnels and passages of the Undercity and seeps up into the City above.

### WHAT IS A REFLECTION?

Reflections are our opposites, but the way that manifests varies from person to person. Some people's Reflections are complete inversions, valuing everything their counterpart doesn't and despising everything they do. Others bring to the surface everything their counterpart wants to keep hidden, representing all their deepest regrets and flaws. Still others take the shape of everything their counterpart wishes they could be, but cannot.

Are these forms intentional cruelty? Well, it's hard to tell. After all, to the Reflection, we're a similar mockery of everything they hold dear. If your Reflection is a greater version of yourself, wouldn't you to them be an expression of everything they've tried to leave behind?

*The moment I read this section, the moment I understood its significance...*
*I immediately set out and slew my Reflection. Too much rests on my shoulders. Too much would be lost if the things it knew got out.*

*The conniving thing didn't even put up a fight. Pathetic.*

# The Reflection

## Where Everything We Refuse to Face Lies in Wait

Odd. This whole section seems off.

### The Reflection
**Trait– Layer**
The nemesis. Opens when you kill an alternate version of yourself, and accessible through any reflective surface while your Reflection is missing.

**[Recover Traits by:]** Finding the unsettling acts your Reflection has committed with them.

### Disquieting
**Trait**
Everything here's wrong, and it makes your skin writhe. Anything you've found comfort in before is missing or changed in this place.

**[1 Token:]** Find the Reflection of someone you know, and learn what they keep hidden.

### Lethal
**Trait**
It's much easier to die in a world fundamentally hostile to you. Take even mild threats more seriously here.

**[1 Token:]** Invite disaster or catastrophe.

**You've done something terrible.** The Disparateum is a world of duplicates- once you start exploring other layers, you're bound to run into plenty of versions of yourself. Dream-copies, memory fragments, future selves, digital imprints, they're all branching off from some difficult-to-define Self, carving their own paths through the infinite possibility space. Living their own, irreplicable lives.

And you killed one. For whatever reason, you thought it'd be a good idea to kill a fragment of yourself.

Your Reflection refuses to face you now. When you look in the mirror, the other side is empty. But there's an opportunity there, too. You step through the glass and find yourself in a world exactly like your own, but not. I'm sure there's no end to the things you can imagine to do with a second Named City. Just watch out for the residents, and especially for your Reflection. It's not hiding. It's planning.

# The Interior
## Where Truths are Laid Bare

**The Interior**
**Trait– Layer**
The space within. Opens when you have a crisis of identity, and can be reached by crossing through any representation of the self.

**[Recover traits by:]** Examining your relationship to them, or uncovering unsettling truths about them.

**Timeless**
**Trait**
The Interior is detached from time. Anything that happens within it occurs instantaneously to those outside it.

**[1 Token:]** Perform your next action a million times before you leave the Interior.

**The Disparateum is home to many things stranger than worlds.** The further out you travel, the less you can expect the Disparateum to resemble our typical reality. Here on the fringes, layers represent concepts and patterns, defining how the world "above" them functions. Be careful tampering here, the ripple effects can be enormous.

This layer is where souls reside. Every person has one, as do some things that aren't quite people. It contains the sum of your experiences, the shape of your being, and the trajectory of your life. Of your lives, really, as this place isn't limited to just the you-that-is, but is bound to every you-that-could-be. It's a place with a lot of power, and a lot of risk. Use it wisely.

# The True Self

Inside you is a palace. Its walls are your boundaries, its furnishings your qualities. It's not always a literal palace, mind: for some, it's an iron spire, for others a dense forest. Sometimes it's a place you've been, sometimes it's a place you explored in dreams, and sometimes it's born from nothing you know or remember, but still tingles with familiarity. However, it's always grand, sacred, and labyrinthine. Here's an overview of the kinds of places you can expect to find.

### The Arms

A pair of long, twisting hallways flank the rest of the palace, adorned with tools, mementos, and trophies. Everything here represents some skill, talent, or quality you possess. Old, partially forgotten skills are covered in dust and cobwebs; skills in the process of being learned may be rough, unrefined, or needing assembly. Changes here can give you incredible new talents and aptitudes, but don't provide the knowledge and experience associated with them. Be careful when trying them out for the first time.

### The Lungs

In the basement of your palace is a vast machine, shuddering and pulsing as it maintains your soul. You see no workers here, but their handiwork is everywhere- tools left scattered about, freshly repaired machine parts, mugs of still-hot coffee sitting out on desks covered in blueprints. It's like they all suddenly left the moment you arrived, and will just as suddenly return when you leave.

### The Mind

At the highest point of your palace, a great library bears the total weight of your experiences. Every thought, memory, sensory experience, it's all recorded here in precise detail. Within these walls, nothing is lost or overlooked, but learning from this place isn't just a matter of locating the exact information you need. Each person's library is recorded in its own language, with its own structures and patterns. Decoding it requires enormous skill, patience, and no small amount of luck, but the treasure trove it unlocks is unimaginable.

### The Heart

Tucked into a side passage, behind a dusty bookshelf, or covered in peeling wallpaper, there is a door. Behind that door is a small room. I couldn't tell you what's inside yours, and I would never tell you what's inside mine. All I can say is that you should keep that door as hidden as you can, because no amount of self-actualization is worth the risk of someone else finding the root of your fundamental essence.

#### Echoes of Others

When you enter the Interior, you find yourself in a closed-off representation of your own mind. However, that's not to say you'll be alone. Your Interior may be populated by Echoes, mental representations of the people they resemble cobbled together from your perceptions of them. The better you know someone, the more accurate their Echo will be, but no Echo is perfect and many will differ in dramatic and unexpected ways. Typically, players control Echoes of their own characters.

#### A River, Branching

Your Interior may be limited to just you, but it's not limited to any *particular* you. The Mind holds the experiences of every version of you, the Heart holds the key that unites you all. You may, on occasion, encounter another version of yourself roaming these halls. Try to remember that you're no more true than them.

# The Statue Garden

True to its name, the spaces you find in the Interior are always enclosed. If it has windows, they look out on more rooms, more halls. If it has doors, they only lead further inside. However, that's not to say it's inescapable–you just need to make your own way out.

### Getting Out

The statues of the garden are indestructible- from the outside. From within, it's not terribly hard to dig through. Moreover, many folks find themselves with a palace already filled with holes–these could be signs of loss, damage from an internal struggle, gaps left by a rejected part of yourself, or (such as with the Keykeepers) an esoteric means of drawing in great power. Regardless, they offer unique opportunities on this layer as long as they're open, but also risk the possibility of someone *else* getting in.

## The World Outside

The world outside the Interior is a massive, petrified version of the moment you entered the layer. Living things are statues at a hundred times the scale, preserved perfectly in dusty gray stone. The sky is a gently glowing firmament made of massive purple crystals, resembling the inside of a geode.

Typically, this world will be an oversized version of the Named City, but that's not always the case. You can access the Interior from any layer, and can even travel to other layers from within it, as long as you're able to meet their requirements while you're an inch tall.

## The Statues

Each person is represented in the Interior by a massive stone statue, with their palace contained within it. Holes broken through these statues are lined with geodic crystals. From the outside, this stone is completely indestructible: you can scratch at its rough surface a bit, and can even drive a climbing spike securely into it, but it can only be broken through from the inside.

### Questions Raised

If all people are statues in the Interior, then what of actual statues? What would it be like if you could somehow climb into one of them? Is their soul preserved inside, or has something else taken up residence? Unfortunately, it seems there's no way to know.

These statues are often highly realistic, but sometimes take on strange, abstract structures, particularly when it comes to the more unusual denizens of the Disparateum. Statues that don't resemble a person's physical form may be a glimpse into how they truly see themselves, and statues made of unusual materials may be a sign that someone comes from a layer other than the Named City.

# Ritual of Reshaping

## For Cutting Away the False Self, and Revealing the True

We are ever-changing, constantly taking on new aspects and discarding old ones. We can't live without change, we can't exist in stagnation. This is a ritual for those who can't wait any longer.
**[To the Ritual's Performer:]** What trait have you chosen to change today?

**[To Those Who Know You as You Were:]** What memories will you always hold?

**[To Those Who Know You as You Will Be:]** What will only become possible now?

The moment comes.
**[To the Ritual's Performer:]** With this, are you revealing long-hidden truths, or cutting off long-lingering falsehoods?

**[If Revealing the True:]** Either temporarily affix a new trait over the old on your character sheet, or permanently affix a temporary trait.

**[If Cutting Away the False:]** Cut the trait off your character sheet.

*I hope you realize just how foolish this ritual is.*

*This whole layer demonstrates the*
*unwavering truth of the Disparateum:*
*we are cogs in a beautiful, perfect machine.*
*Our past, future, all our possible selves,*
*all laid out to see. There's no change there.*
*All of creation is described in this very Book!*
*Everything that is, everything that should be,*
*is contained within these unwavering pages.*

*My name is Alexander.*
*I am the Lord of Scriptures*
*and master of the Disparateum.*
*I am nothing less, and have no need of change.*

*For posterity:*
*Today I made a discovery. Possibly the most important discovery of all time; even my previous accomplishments pale in the face of it. Today I confirmed what I'd long suspected, what I'd always hoped but could never put into words.*

*This is a perfect world. Born from nothing, shaped by the all-knowing, and set into motion with divine purpose.*

*I am to be this world's guardian. I know this now. All my life, the signs have pointed to this. I leave my words here so that the inheritor of this book can carry on my mission, and the Disparateum will be preserved forever.*

*—Alexander*

*…what*

If it's interesting,
you can do it

If you forget about it,
ignore it

The City is wide enough
for all of us

# DISPARATEUM

## A game for a Bard,
## a Mage, and a Scribe

*What?*
*What's happening?*

*I don't understand…*

*Could this be another instance of tampering?*

*…But that was my handwriting.*

# Ritual of Beginning

## For Guiding a New Age of Stories

It's late at night in the Named City, and three old friends are playing a game. Many rounds have been played, and many things have already been gambled or bartered away. Here, though, at the end of the night, simple bets aren't cutting it anymore. As the sun begins to rise outside, three bets are placed.

The Bard bets the greatest story ever told.
**[To the Bard:]** How has this story always eluded you, and what breakthrough have you recently had in getting it?

The Mage bets power beyond imagining.
**[To the Mage:]** What terrible thing must you overcome to get it, and what tiny edge will you have in that conflict?

*…Scribe?*

*Where have I heard that before?*

The Scribe bets knowledge without equal.
**[To the Scribe:]** What insurmountable obstacle exists to keep the source of this knowledge safe, and how do you plan to outsmart it?

The final round of the game is played, and while it's close, one player manages a beautiful victory.
**[To all Players:]** Who wins?
**[To the Losers:]** What's your first step in getting what you've promised?
**[To the Winner:]** How will you accompany your friends on their journeys?

*Oh, you motherfucker.*

*Of course, I knew someone had to be interfering with my work, but now I understand why. After all, there's only one kind of person who would benefit from the perversion of my world.*

*You're one of them. An outsider. You're a PC.*

# NPCs

The Disparateum is a broad, diverse, and strange place. The Named City alone is host to hundreds of thousands from all over the world, each with their own irreplicable perspective. Often, the first time you meet someone, they'll seem simple and one-dimensional, but over time you'll come to understand who they are and what makes them tick.

**SPECIAL CASES**
Not everything described here applies universally. Some NPCs may be resistant or immune to the warping effects of various layers, and some players may run their PCs as being subject to those same whims. Use only what inspires you, and ignore any limitations that would get in the way of what the table agrees would be most interesting. The Disparateum's a broad place, it's got plenty of room for corner cases and exceptions.

## MAKING NPCS

NPCs often start off as a simple idea, existing to fill a gap in the world or add flavor to a scene. Many NPCs won't even have names when they're first introduced, and instead go by a title or descriptor. You may know a character as "the Old Blacksmith" forever, or you may learn that his name is Anton as you get to know him and his daughters.

NPCs have a limit of four traits, and don't have access to roles like PCs do. If they have a trait related to their title or descriptor, that'll go in the top right corner as a role would. NPCs don't have any restrictions on their starting ranks and don't tend to rank up except through major circumstance.

Any player can introduce (or reintroduce) NPCs to a scene as is reasonable. If your table wants to delve deep into what makes your cast of NPCs tick, you should lean towards reintroducing NPCs when you would otherwise make new ones, and try to put characters in unusual places to see what happens. On the contrary, if your table prefers a world that feels vast and expansive, try introducing new characters early and often, and push the envelope on how weird they can be. And remember, this isn't a binary- you can always broaden and narrow your scope as you play, focusing in on odd throwaway characters or contextualizing well-developed characters in a wider world.

## CONTEXT-SENSITIVE

Just like PCs, NPCs can travel the Disparateum, and even those who don't will have alternate versions of themselves scattered across the layers. Unlike PCs, however, NPCs are often dramatically influenced by the layer they're on. A cheerful NPC may become grim and morose on a melancholy layer, and a frustrating antagonist might become positively friendly in the right context.

This is where their traits come in. Regardless of context, an NPC's traits describe fundamental aspects of their character. These traits may be expressed differently, but they form a foundation for the character, a consistent throughline to their stories and experiences.

*The Disparateum is perfect.*
*It's been shaped by divine hands,*
*set in motion with the exacting*
*precision of a god.*

*And what do you do? You spoil it.*
*You stumble cluelessly around,*
*changing things on a whim,*
*upsetting the beautiful interplay*
*of my world.*

*And for what?*

## PLAYING WITH NPCS

NPCs are played by the Tower of the layer they're currently on, but any player can take token actions with them. If an NPC has a trait, anyone at the table can spend a token from that trait to bring it into play. Players can also introduce problems for an NPC to refresh one of their traits, but have to pay out the tokens required to bring them up to full out of their PC's own supply.

# TOWERS

The Tower is a powerful NPC role, used exclusively by the figures that shape the Disparateum. Each layer of reality is kept stable by a singular Tower, who has an enormous amount of direct and indirect influence over that layer. Towers are powerful, formidable forces, but lack the direct influence over the world that PCs have.

## SPINE OF THE WORLD

Layers can't exist without Towers, though they take on different forms and play different roles across the Disparateum. Towers are united by a few properties, such as not needing to spend tokens to take actions on their layer, but otherwise differ wildly from one another. Not every layer's Tower is obvious, either–it may be immediately clear that the Slumbering God is the Dreaming's Tower, but not as much that you're the Tower of your own Interior.

## TOWERS AND NPCS

NPCs are the primary way Towers exert their influence. The broad strokes of what an NPC does depends on the actions of the table and the token economy, but the specifics always come down to the current layer's Tower. Typically, Towers use this to promote the kind of behavior they want to see in their layer. NPCs won't act counter to their true nature, but will lean more subdued or dramatic, more friendly or hostile, more honest or shady, depending on the whims of the Tower.

## ALTERNATE STRUCTURES

So far, this book has assumed you're playing with a single player controlling every Tower, but that's not always the case. Players can distribute the various Towers out among themselves before the game, or hand them out over the course of play. Players can trade off responsibility for one or more Towers, or collaboratively control them. You could even play a game with one player running all Towers, but who also plays a PC and participates in the action directly.

### THE SLUMBERING GOD

The Tower of both the City and the Dreaming. Both instances of it (the Slumbering and Moldering God) are in fact the same being at different points in time, with its death and entombment under the City its inevitable conclusion.

The Slumbering God is even-handed and conflict-adverse, rarely acting directly. It's theorized that it plays some part in drawing heroes and legends to the Disparateum, but if there's a direct connection there it hasn't yet been found.

### THE COUNCIL OF DRAGONS

The Narrative is controlled by a group of Towers, each with complete control over their own genre of story but little influence over the others.

The dragons are dramatic, self-obsessed, and unsubtle. They're always looking for opportunities to play themselves up, so expect stories that cross genre borders to experience sudden changes in tone, theme, and characterization. NPCs in the Narrative are *always* hamming it up due to this influence.

### THE WEAVER WIDOW

Deep inside the Network lies the Weaver Widow and her swarm of spiders. She rules her layer from the shadows, influencing the world outside through the information allowed to pass through her domain.

The Widow is intense and critical, judging others solely by their value to her. Those who satisfy her (by helping to expand the Network, for instance) can expect to be rewarded with secret truths that otherwise might never have seen the light of day.

*If you truly understood the beauty of the Disparateum,*
*the sacredness of the ground you trample to death,*
*you would understand why I have to do what I do.*

*You would understand that you*
*deserve everything I have in store.*

*You would thank me for your death.*

# The Playground

## Where Kindness and Imagination Illuminate the Dark

### The Playground
**Trait– Layer**
The last refuge of imagination. Opens when jaded reality falls apart, and can be reached through any dark passage if led by a willing child.

**[Recover traits by:]** Embracing reckless childhood and surrendering reserved maturity.

### Shadow Puppets
**Trait**
People and objects can take on exaggerated, fanciful forms in this layer, and everything's imbued with a bit of magic.

**[1 Token:]** Give mythological significance to the mundane.

### Battle of Wits
**Trait**
Physical fights never go beyond pulling hair, but arguments here can shake the earth.

**[1 Token:]** Forget and move on from a conflict.

**[3 Tokens:]** Enforce a binding agreement.

**Where is it, exactly, that kids disappear to?** What's happening when they run off into the woods at the edge of town, or sneak into abandoned places, or crawl into the hidden depths of a pillow fort?

The Playground is a sanctuary at the edge of consciousness, where children are free to do as they please without the stifling rules of the adult world. Here they act out grand adventures, share secrets and wisdom that grown-ups couldn't comprehend, and make glorious pacts to never grow gray and boring.

> *Um, hi. I've been invited by the children to add my own observations. Whoever chronicled this place before me was… quite effuse, and not terribly concerned with accuracy, but regardless I still found an impressive, beautiful, and strange community here at the edge of the Disparateum.*

# The Thousand-Chair Castle

It's a rare adult who lays eyes upon the Thousand-Chair Castle, seat of kid governance and the only authority all children respect. It's an even rarer adult who gets to survive the experience. The massive, glorious structure towers over the rest of the layer, and its constant illumination from within means the kids who reside here can travel far into the wilds and still make it home for dinner.

*The "Castle" is more like a mountain of giant furniture that's been haphazardly nailed, bolted, and tied together. It's lucky that this layer doesn't seem to have any wind, since a well-placed breeze would probably bring the whole place down.*

## The Greeting Hall

The Castle has countless doors, opening up to hidden corners all across the Disparateum. Nobody knows where they all go, but children have an innate knack for finding them that's lost as they grow older. Many of those doors open here, to a grand festival hall, where returning visitors are welcomed back and newcomers are celebrated.

*I was welcomed to the Castle by a crowd of excited children, some of whom appeared to be dressed like newsies. I answered as many of their shouted questions as I could, but glimpsing their notebooks I saw they were mostly just filled with doodles of robots and dinosaurs.*

### Navigation

The Thousand-Chair Castle is a tricky place to get around, given its unique foundations and the fact that the kids who built it rarely put any thought into how it would all come together. As such, to get from one place to another often involves navigating a series of narrow bridges, wide gaps, trust falls, ladders, slopes, slides, monkey bars, and more. Try not to fall.

## The Book of Dibs

A dusty and ancient tome, containing within all binding compacts made between kids. It tracks every instance of dibs dating back to the dawn of kidkind, as well as every pinky promise, double dog dare, and verbal agreement to "just borrow it for a few days." Truly, no text is more sacred, and the Book is invoked whenever a conflict between kids threatens to tear the Playground apart.

*I spent hours in a guild meeting, listening as the kids argued back and forth about the contents of the book, never opening or even approaching it. I managed to sneak a glimpse inside when the room was nearly cleared out. It's a cookbook. Honestly, I'm not sure how many kids here even know how to read.*
*…Well, it makes for a decent enough place to collect my notes.*

## Emperor's Inner Chamber

A small, smoky chamber, sitting at the pinnacle of the Castle. Here, the Cootie Catchers in their plague masks steer us away from disaster, and the sword-bearing Red Rovers guide us enthusiastically toward it. The Peekaboos stand beside the Emperor, whispering prophecies into their ear, and **It** performs humiliating spectacles while scheming to pass on its curse.

I DID SOME RESEARCH INTO THE AUTHOR OF THESE FIELD NOTES. MINOR BUREAUCRAT FROM THRONE DISTRICT, NO FAMILY, KEPT TO THEMSELF.

*I was only granted audience with the Emperor for a moment, but… it's hard to deny their intense presence, even at what I can't imagine is a day over nine. I was given their blessing to continue on, and let out a breath I didn't realize I'd been holding.*

# The Wider Kingdom

Winding roads extend out from the Castle across the gently rolling hills. Settlements dot the expanse, and lanterns along the roads bring illumination to the eternal night. While the Castle holds the majority of the layer's population, almost all the permanent residents live out here in small, tight-knit communities.

*From the Castle, these just look like tiny glowing dots in the vast darkness of the layer. Like stars in the night sky. Up close, there's somehow even more vibrancy than the interior of the Castle, though thankfully the kids here are a bit more mellow. Or maybe I'm just getting used to it here.*

## Hut of the Cryptic Old Man

At the base of the hill the Castle is built onto lies a small, humble single-room home, carved out of a knot in a huge broken-off chair leg. Here, surrounded by smoldering braziers and bookshelves of ancient tomes, lives the Cryptic Old Man. Come to him to receive ancient wisdoms, thoughtful riddles, and a powerful relic whose significance will only become apparent at the end of your journey.

I'VE GOT NO IDEA HOW THE KIDS FOUND THEM, BUT THEY'RE PERFECT FOR THE JOB.

*The Cryptic Old Man is actually just another kid, wearing a big bushy fake beard and speaking with an exaggerated old man voice. Kids take turns taking on the role, and often argue about who's gonna get to play him next. All that being said, the Cryptic Old Man's advice is still quite valuable…*

**Adventure!**
The outer edges of the Kingdom of Children are ripe with monsters and adventures. Any kid you talk to will have a daring quest for you to undergo, and even just setting off with a wooden sword and a dream is enough to fall into the arms of something exciting and cool. Just make sure to come back before dinner, and don't stray too far out.

## Market Square

A large open square, closed in by caravans and tents from across the Disparateum. Traders gather here with their sand-scoured cloaks and treasure-laden packs. You can obtain grand treasures from across the worldscape here… if you can afford them.

*Kids sitting in a sandbox, arguing with each other over the prices of "potions" and "remedies" made from grass and rocks mashed up in dirty water. I bought a bottle of something dark brown and purple for a couple beetle shells I'd found earlier, and the children cheered when I pretended to drink it. I'll pack it with the rest of my supplies.*

SOUNDS LIKE THEY HAD A GOOD TIME, TOO.

THAT COUNTS FOR A LOT.

## The Proving Grounds

A training ground, where tamed monsters are used to hone the martial skills of would-be adventurers. New recruits must dodge through endless waves of foes in the Circle of Death, or challenge an opponent that can never be defeated in the Pit.

*A merry-go-round and a… uh, what are those things called? It's a green blob thing on a spring, that kids can sit on and rock back and forth. Seems dangerous, but not in the way they're insisting.*

# The Edge

There are places where even children aren't meant to be. Turn back.

…

### The Obsidian Plains

Here is the outer border of the domain of children. The endless rolling expanse breaks, spikes of glassy rock jutting out at angles, and cold black sand fills the gaps. Mind your footing here: things lurk in the cracks and fissures, and toys lost this far out are often best left where they fall.

*This far out… the Castle looks different. It's built on something. Something big. Something sleeping. Each inhale and exhale makes the whole structure sway and creak. What… what is this place?*

### The Shadewood

Beyond the Plains, tall shadowy trees tangle the ground with their roots. Blue lights dance somewhere deep in the forest, their light only accentuating the unforgiving darkness. The trees whisper as they sway without wind, and the voices sound vaguely familiar. Like a parent calling from far off, or a closet door left slightly ajar at night. Don't listen.

*I've been traveling for weeks now. At least, that's how it feels. There's no sun or moon here, so I've had to judge the time by how many of my rations I've gone through. The jelly sandwiches and fruit candies the kids packed me didn't last long, but luckily I brought some more sensible foods too. I'm down to just a day or two more, if I stretch it.*

### Ink Lake

The last boundary. A small dock crouches on the water, with a small boat tethered to it. A small lantern hangs above, the furthest light from the Castle. Nobody built this dock, and nobody maintains it. It's not part of our world.

*There's something out there. Beyond the edge of this layer, where the light from the Castle doesn't shine. I… I don't feel drawn to it, really. It's not a pull. It's a cold realization. It's… I know I'm going to go there, so there's no point resisting. I'm leaving this book here, on the dock. When I retrieve it on the trip back, I'll update this entry.*

SLEEP EASY, FRIEND.
WE'LL REMEMBER YOU.

### Origins of the Playground

Myths about the origins of the Playground abound in the Castle. Some say it was once the greatest pillow fort to ever exist, growing so grand and imposing that the whole thing collapsed into itself. Others say it was built slowly, each child contributing a single chair in the last days of their childhood, until the Castle was mighty enough to usher in a new world.

Others look out to the edge and quietly wonder to themselves what this place truly is.

# MASKS

The Disparateum is a broad, diverse, and strange place. Across its reaches, among the endless populations of its endless layers, you'll find people of every appearance, every history, every outlook. Every possible path through the Disparateum has or will be walked, and no path will be walked twice. However, even as the worldscape refuses to repeat itself, it absolutely loves to rhyme.

## LOOKING DOWN ANOTHER PATH

Everyone in the Disparateum has alternate selves, in the same way that a single place can appear in different forms across different layers. Towers are often the ones introducing us to our alternate selves, but like NPCs, anyone playing the game can introduce an alternate version of anyone else as is reasonable. While it's often the responsibility of the player introducing the alternate version to come up with how they differ from the character we're familiar with, it's always whoever plays that character who gets final say and ultimate control. The player introducing them gets to craft the mask, but the player playing the character is the one who wears it.

## USING MASKS

Masks are a cluster of one or more orthogonally-connected traits, resembling cut-up pieces of a character sheet. This mask is laid over the character's base sheet to determine the traits of the alternate version of them. Anything not covered by the mask represent places where the original and alternate line up, while traits on the mask differentiate them. Masks tend to avoid tampering with a character's upper-left-hand trait, as replacing that would make them a different character altogether, but otherwise any and all changes are fair game.

Most masks only consist of one to three traits, meaning that NPCs might only be able to wear them one way but PCs can fit them onto their sheet in a number of ways, covering different traits as they choose. There's no requirement that every time you put on a mask you wear it the same way, just that it remains firmly affixed for the duration of the current scene.

## WEARING MANY MASKS

Sometimes a version of a character is multiple steps away from the original, like a version of you who's a space alien and a scientist, or a werewolf and a time traveler, or a wizard and a professional chef. In cases like this, you might want to use more than one mask. Just keep in mind that order counts, because some traits might get overlapped multiple times. Your scientist side and your alien side might be entirely separate, or they might be deeply intertwined.

HI THERE! I'LL GET A CHANCE TO INTRODUCE MYSELF MORE PROPERLY LATER, BUT FOR NOW YOU CAN CALL ME THE SCRIBE. I'M REALLY GLAD TO MEET YOU!

*Who was she talking to?*
*Me?*
*Did she know I would find the Book, that I'd be reading this inscription?*

**FIGURE 3**
Masks overlaid on a character sheet.

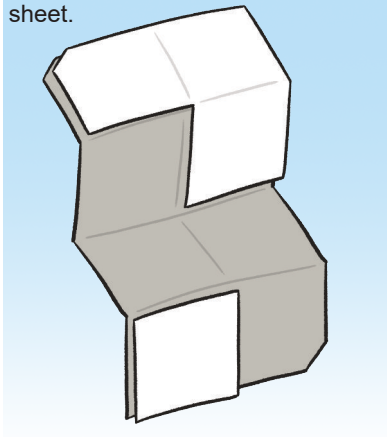

OH, I SUPPOSE YOU'LL NEED SOME WAY TO KEEP TRACK OF IT ALL. HERE'S A BRIEF GUIDE TO WHAT YOU'LL LIKELY BE ABLE TO FIND, THOUGH I DIDN'T ADD THE PAGE NUMBERS CUZ... WELL, YOU'LL SEE.

BOOK 2
-THE PENUMBRA
-THE MEMORY
-THE REFRACTION
-THE SURREAL
-THE INEVITABLE
-THE ABYSS

HOPE IT HELPS!

# Player Roles

Each player chooses a unique role from the list below for their character. These roles give the character you're playing some starting definition and a handful of unique abilities, but also offer narrative roles for that character to explore, play with, and reshape.

## The Bard

You're a free spirit, a troublemaker, the inciting incident in a thousand people's stories. The Named City is your home because it's the best party in the world, The City That Always Dreams, the end of every map and the start of every detour.

In story terms, you're the comic relief, the thoughtful elder, the beating heart of the narrative. The Knight gets to be a protagonist because they're *important*, the keystone to a story that will change the Disparateum forever. You're a protagonist cuz you're just a delight to watch. Choose the Bard if you wanna play with expectations, hype up your friends, and pull everyone into your orbit.

## The Mage

You're a nervous wreck. The Disparateum is a thin film over a very, very deep ocean, and you've seen the things that swim around down there. You know the games gods play, and you're not interested in being made a pawn. Of course, nobody can just leave the game, so you've done the next best thing; you've gotten leverage.

In story terms, you're the manic scientist, the wizard in her tower, the frazzled conspiracy theorist. You're powerful, when power matters. The Thief is someone who loves to swan-dive into trouble, someone for whom a peaceful quiet life would never agree. You, however, you understand that there *is* no peaceful life. Normalcy is a lie the monsters whisper in our ear while we sleep. Best to have a knife under your pillow. Choose the Mage if you want to get pulled in too deep, give awful advice that'll get us all killed, and spit in the eye of the unfathomable.

## The Scribe

You're an academic, a historian and record-keeper, observant student to the subtleties of the world. In a world so bright and loud and busy, someone must appreciate all the forgotten and overlooked things. You've chosen to shoulder the task.

In story terms, you're the font of wisdom, the scholar in the library stacks, the author with a half-finished manuscript. The Seer plays contrast to their trio by being distant and strange, by standing a bit above the Disparateum and gazing across the possibilities. Your companions are already plenty strange, plenty versed in the forces at work in this world, so you balance them out by being grounded in the real. Choose the Scribe if you want to weave story threads together, fixate on minute details, and care about the inner lives of every single person you meet.

### The Bard

**Trait– Role**
Playwright and party-goer, the Bard thrives in the beauty of the Disparateum.

**Rank One:** The Bard is always involved in the festivities.
**Rank Two:** The Bard tells stories that have a life of their own.
**Rank Three:** The Bard can hear table talk, and is free to break the fourth wall without drawing attention to themselves.
**Rank Four:** The Bard can narrate any scene that they're not the focus of.

### The Mage

**Trait– Role**
Sorcerer and pact-keeper, the Mage forges the bonds that keep the Towers in harmony.

**Rank One:** The Mage is anxious, and you would be too if you knew what they know.
**Rank Two:** The Mage can hear whispers, smell mystery, and see intrigue.
**Rank Three:** The Mage reads and interprets all Rituals.
**Rank Four:** The Mage has communed with the greatest powers of the Disparateum, and approaches them on even footing.

### The Scribe

**Trait– Role**
Author and secret-hunter, the Scribe has dedicated themselves to the pursuit and dissemination of knowledge.

**Rank One:** The Scribe is keen, well-read, and always working on something.
**Rank Two:** The Scribe's notes are a reliable source, and can be used to resolve any uncertainties.
**Rank Three:** The Scribe fills in the gaps and details of the world, ensuring everything connects as it should.
**Rank Four:** The Scribe has easy access to all written information in the Disparateum.

*And that begins to explain how you once got your hands on the Book.*

*No matter. I'll root out your hiding spot, and be rid of you.*

*There is work to be done.*

# The Memory

## Where the Past is Carefully Tilled and Sown

**The Memory**
**Trait– Layer**
The roots of self. Opens when something stirs in your chest, and can be reached by following a warm summer breeze.

**[Recover traits by:]** Seeking comfort in your inspirations.

**Associative**
**Trait**
Time and place don't follow strict rules here. Moments blur together, places shift and evolve, nothing quite changes but nothing quite stays the same either.

**[1 Token:]** Remain in the current moment.

**Where are you from?** Nothing is born from nothing. We all are the products of our pasts, a tangled knot of memories and influences, loose threads and missed connections. These things are buried within us, usually, only showing their faces when their sprouts break the surface. Here, however, we turn over the earth. We flip ourselves inside-out, expose our roots and soils and crawling things.

What will you find here? What will you dig out from the corners of your heart? What will they say about who you are, who you've been this whole time?

# Hometown

An idyllic little neighborhood, occupied with rows and rows of warm childhood homes. Sprawling yards filled with apple trees and rabbit holes carpet the space between houses, blurring the lines between one plot of land and the next. It's so quiet here. Did a place like this ever exist in the Named City? Does it matter?

### Intergalactic Comics

The local comics and games shop. New releases near the front, growing older and stranger and less polished as you go deeper between the shelves. The counter is glass, containing a vast collection of playing cards, game cartridges, and trinkets. They also have a small back room for fantasy and science fiction movies, all rubber props and bad face paint. It's here you first saw the artifice in fiction, and here that you first decided it didn't matter.

### Friend's Basement

Your best friend lives down the street, and his house is a haven one can barely describe. His cabinet is full of all the snacks you aren't allowed at home, his fridge stuffed with soda and pizza, his basement has every new video game and movie, and his bedroom's even got a TV in it. His parents are sweet enough, but they're mostly a distant blur; they appear in the doorway and ask a few questions before melding back into the wallpaper.

### The Gully

A shallow ravine carved out by a slow, lazy stream. Only a few dozen paces from the rest of the neighborhood, but when you're there it feels like a secret place deep, deep in the woods. Kids meet here to play strange games and share secrets that can't be spoken out loud anywhere else. A burned-out tree clings to one wall of the gully, and the hollow inside is full of books, rocks, and the sturdiest sticks.

### Home

You don't need me to describe it.

### Nostalgia and Truth

Not everyone's childhood was idyllic. That's not the point. I mean, it is a bit, but you know what I'm saying. Nostalgia is a collaborative effort, it requires the you of now and the you of then to collaborate.

Reach across time, and construct something that resonates with you. This is where you belong.

IS HE GONE? ALRIGHT.

UGH, WHAT A PAIN. ANYWAY, HI! MY NAME IS MIRANDA, AND I'M THE SCRIBE! WELL, I'M ONE OF MANY POSSIBLE SCRIBES. I'M SURE YOUR VERSION OF THE DISPARATEUM WILL HAVE ITS OWN SCRIBE, WITH THEIR OWN JOYS AND CHALLENGES!

I'M WHAT'S CALLED A "PLAYER CHARACTER", OR PC. THAT MEANS I'VE BEEN PICKED OUT BY THE DISPARATEUM TO PLAY A SPECIAL ROLE. KINDA LIKE THE PROTAGONISTS OF A NOVEL, OR THE LEADS IN A PLAY!

# Somewheres

Transient memories live here. Doors left open a crack, curtains not fully drawn, corners peeked around. Hazy impressions left by single moments, unable to fully cohere. Memories overlap or conflict, timelines become jumbled, facts don't stick around when you look away from them. The world is fragile here, like fallen leaves beginning to dry out. Be careful where you step.

## The Clearing

You went camping here, when you were much younger. You took a winding path through the forest, you picked mushrooms and climbed on rocks, and that night you arrived here; the clearing. You stared up at the stars and listened to stories from a time before you existed and you fell asleep on the grass next to the campfire. When you woke up you were already home. You've tried looking, but you never found the path back.

## The Clothesrack Labyrinth

Sneak away from your parents at the department store to hide within the clothes racks, or open the door to an overstuffed closet and worm your way inside. Face the way you came in, peeking between the heavy coats and identical shirts. Then step back. And back. And back. You can keep going, as far as you'd like. You can stay here forever, whisper the dresses and suits and hanging pants. You never have to be alone again.

## The Theater

You don't know where it is. It lives in an island of space a few buildings wide, disconnected from the rest of the world. Your parents would say "we're going to the Theater" and, after some abstracted time and travel, you were here. You watched so many performances here, stretching back as early as you can remember. Not all of them were good, and most didn't stick with you beyond a lingering feeling or a few words of dialog, but the cumulative force of them changed you forever. One time, as you were leaving late one night, you caught a glimpse of one of the actors in the crowd. They still had faint traces of makeup, a costume shirt hidden under their jacket. They caught you staring, and winked. For some reason, you've never forgotten that.

## The House at the End of the Lane

Your first crush lives here. You stood outside the door once, waiting for them to come out, and caught a glimpse of the world inside. It was cold, and stern. You're not sure how someone so warm came out of a place like that. You're not sure if they know how brightly they shine.

# The Museum of Arts and Magic (Backroom Collection)

Structures of featureless gray sandstone loom over the far edge of the Named City's quaint little horizon, marking where the Museum of Arts and Magic has set up shop. This facility is the heart of the Museum's archives, where all the most delicate and sensitive collections are stored and studied. Sitting at the edge of Memory, this plot of land was once shifty and unstable, but through great effort (and several generous contributions) the MoAM architects have reinforced and reified the grounds, consolidating dozens of fuzzy and unclear ideoforms into a single, easily managed Truth.

GOSH, I LOVE THE MUSEUM. WHAT A WONDERFUL THING, TO DEDICATE A PLACE TO THE JOY OF DISCOVERY! I STILL VISIT OFTEN, EVEN IF I'VE LONG SINCE GROWN PAST THE POINT WHERE I THINK THEY'RE INFALLIBLE.

## Unusual Biological Materials Lab

Monsters aren't fully material. They have properties beyond the physical, not the least of which being their ability to spontaneously generate under certain conditions. This metaphysical nature, combined with the Memory's unique properties, led to the first batch of biological samples brought here to return to life, destroying museum property and creating numerous job openings in their escape. Nowadays, samples are studied by researchers with no familiarity with the creatures being studied, and all analysis of their findings is done far away off-layer.

## Volatile Reactions Containment [Keep Out]

A small backroom, buried in a memory so deep that time moves like molasses. Relics undergoing catastrophic meltdown are tossed into here, left to slowly rip themselves apart as seconds pass like months. Theoretically research is being done into reversing and repairing these artifacts, but funding is limited and interest is low. Researchers assigned to it are often treated similarly to the artifacts themselves: tucked away and forgotten.

## Center for Overlap Effect Studies

A small office, located in a tucked-away corner of the facility. When the Museum first broke ground in this layer, all contradictory notions were thoroughly stomped out, and yet even now the Museum's archive records are dotted with inconsistencies and contradictions. It's the tireless work of the Overlap Effect Office to correct these mistakes and root out their perplexing origin. The Station's head researcher is a frazzled scientist with either a spring or autumn birthday, depending on which side of her family you ask.

### The Museum's Operations

MoAM stretches across multiple layers, with hallways and facilities that spill over from one world to another. Part of this is by design; the Museum could never host a collection so diverse and strange all within a single world. However, it's also an inevitable result of this kind of effort; the more you try to classify something, to box it in, to restrict it, the more it gleefully spills out in all directions.

I DON'T KNOW MUCH ABOUT WHAT THE WORLD'S LIKE FOR YOU. IT'S SOMETHING I'VE TALKED A LOT ABOUT WITH MY BARD AND MAGE, BUT THEY'VE BOTH PRETTY MUCH MADE UP THEIR MINDS.

OUR COMMUNICATION IS PRETTY ONE-WAY, UNFORTUNATELY. WE CAN ONLY REALLY SEE THE EFFECTS YOU HAVE ON OUR WORLD, AND YOU'RE STUCK READING WHATEVER I THINK TO WRITE IN THESE MARGINS!

I HOPE SOME DAY WE GET TO SPEAK MORE FREELY.

# Ritual of Remembrance

## For Stepping Once More Into the Past

Something connects with you. You catch a glimpse of a stranger's face, and mistake them for an old friend. You smell someone cooking in the distance, and realize you haven't had your favorite food in years. You taste a phrase on your tongue, and remember the first time it was whispered to you.

You're still here, still aware of yourself, but for a moment you're there as well. You stand waist-deep in the memory as it washes past you.

**[To your Present Self:]** Describe this moment. What do you hear, see, smell, taste, touch? Which sense burns from within, leading you into the past, leaving all the rest bare and dull?

**[To your Past Self:]** Where do we find you? What just happened? What have you not yet realized, that your present self is painfully aware of?

I'M CLOSE WITH THE SCRIBE THAT CAME BEFORE ME. HE OWNS A TATTOO PARLOR IN THE CITY. IT'S A COZY LITTLE PLACE, AND IT'S GOT A HUGE LIBRARY IN THE BACK ROOM! I USED TO GO THERE AFTER SCHOOL AND JUST LIE ON THE FLOOR READING.

I'M NOT SURE WHAT KIND OF STORY HE WAS INVOLVED IN, HE DIDN'T LIKE TO TALK ABOUT IT. BUT I KNOW HIS NARRATIVE ENDED YEARS BACK AND HE'D BEEN LOOKING FOR SOMEONE TO TAKE ON THE MANTLE.

I'M LUCKY! NOT EVERYONE GETS TO MEET SOMEONE WITH THE SAME DESTINY. SCRIBE CAN BE A LONELY ROLE SOMETIMES, I'M GRATEFUL TO HAVE SOMEONE I CAN SHARE MY WORRIES WITH.

# Lingering

The Disparateum is a worldscape of travelers. How could it not be, with so much at your fingertips? The people of the Named City visit other worlds as often as they visit other neighborhoods. Everyone's got a home, of course, whether born or found, but nobody stays in their own layer forever. But… there's something different, here.

### Why Do People Stay Here?

Nobody's ever born in the Memory, and nobody truly dies here either. That alone is a good enough reason for many to stay, but it's not the whole story. You can lose track of things here. Forget that there was ever anything else.

### When Was This, Really?

You never lived in this house. This house never existed, in fact. This whole neighborhood doesn't fit the mold, it doesn't slot into any part of the Named City's history. But is that so wrong? Is it so necessary that this be a true past, that this be your authentic history? Isn't this better? This isn't how it is; it's how it should have been.

### Who Are These People?

Did you really have an aunt who pinched your cheek like that? Did you really make friends with your neighbor on the first day of school? Did you really sneak off with your crush to the gully past the end of the road? Shh, it's okay, you can rest easy here. You've got a lot of questions, good questions, but you don't need them anymore. You're here. Come home.

### Can You Hear It?

There's a… a quality of the air. A slight change in pressure when you tilt your head at the right angle. The sidewalks are vibrating with it when you press your ear to the ground, like the rumbling of a distant train. A hum, of sorts. Everywhere.

You can't listen to it. You shouldn't listen to it. You're already listening to it. You've been listening to it since the moment you stepped foot in this layer. It's soft, gentle. Disarming. At first, it's just the hum, but eventually you start to make out the voices.

**Comfort**

You're safe here. Leave your worries behind.

### LIVING OTHER LIVES
**TRAIT– BOND**
When you sleep, you don't dream of yourself; or rather, you dream of *another* you.

**RANK 1:** Dream a new you each night. Who are they? Where are they now? How did their path diverge from your own?
**RANK 3:** Upon waking, gain access to a trait of theirs as long as you can hold onto the memory of the dream.

### ARCHIVIST
**TRAIT– SKILL**
You've mastered the exploration of your own mind, and now no secret is ever lost or forgotten.

**RANK 2:** You have a photographic memory that stretches back to early childhood.
**RANK 3:** You can relive moments from your past in perfect clarity, including details that would've been impossible for you to know.

### PLUGGED IN
**TRAIT– PACT**
You've interfaced directly with the Weaver Widow and her brood, and now carry her blessing.

**RANK 2:** If it's online, you've heard about it. If it's hidden, you know a way in.
**RANK 4:** Your soul is digital. You can always spend tokens to use the Network's traits, even on other layers.

### INEVITABLE HUBRIS
**TRAIT– WEAKNESS**
Everyone else who's fallen from grace was simply doing it wrong.

**RANK 1:** You stand out among your peers in everything you do.
**RANK 2:** Has anyone ever matched your grandeur? You doubt it.
**RANK 3:** You're unstoppable! Unstoppable, I say!!
**RANK 4:** Uh oh.

# TRAITS
Traits are a means for players to act through characters. In addition to spending tokens to use their PC's own traits, players can spend tokens to invoke an NPC's traits, and can even influence other PCs with their players' consent. Think of them as the control panels for characters, giving you a way to get elbow-deep in their inner workings and see what makes them tick.

## TYPES OF TRAIT
Traits are divided into types; roles, skills, motivations, destinies, bonds, pacts, and weaknesses. Roles are unique to PCs, and each PC has one role. Skills are notable talents, aptitudes, or approaches, and tend to tie you in with wider communities. Motivations and destinies both lead you forward, with motivations being an inner drive you can't help but pursue and destinies being an external force that surrounds and shapes you. Bonds are a powerful, unassailable connection to one person, place, or thing, while pacts are specifically a connection to a particular Tower and their layer. Weaknesses are struggles or flaws you face, and their tokens are most often spent by others when they exploit your vulnerability.

## REGIONAL TRAITS
Some traits are specific to different layers, indicated by a matching background texture. They'll (usually) function normally on other layers, this just serves as a way to mark them as originating from or meaningful to that layer. Sometimes traits like this will be pretty mild on most layers, but much more significant on the layer it's from. Bonds are always regional.

## ALTERNATE STRUCTURES
So far, this book has assumed the three PC roles are each being controlled by a separate player, but that's not always the case. PCs can "belong" to a specific player, can be traded about over the course of a game, or can be guided through group consensus. You might have a dedicated player running the game and playing as the Towers, and that player might also have a PC to their name. Larger groups might combine both sets of character roles to have a game with six PCs, and then divvy up control of them as they see fit. Under extremely strange circumstances, one character might even embody more than one role!

If you're playing with a particularly unusual or imbalanced relationship between players and PCs, a good habit to get into is collecting any tokens you spend in front of you. This lets everyone see at a glance roughly how much influence various players have exerted so far. This isn't meant to shame or slow down players who take a lot of actions, but to encourage players who worry about spending a collective resource to dive in a little more. And remember, recovering traits is pretty easy on nearly every layer, so don't worry about running out!

# TOWERS

Towers are godlike entities scattered across the Disparateum, acting as support structures for the worlds they inhabit. Towers define the boundaries between layers, preventing them from crashing into each other or splitting at the slightest provocation. Once a layer is stabilized by a Tower, it's capable of existing alongside other layers in a safe, orderly way.

## WHAT SETS A TOWER APART?

There are plenty of powerful beings in the Disparateum, what makes Towers so special? Simply put, they have the freedom to act in a way other characters don't. Everyone else is limited by their supply of tokens, no matter how powerful they may be. Everyone else has to spend tokens to influence the world around them, and engage with the world to restore their supply. Towers are different.

Towers can act freely on their own layer, and can always influence NPCs that visit their world. This is why NPCs act differently across different layers: Towers rarely show themselves, so they express their interests and desires by filtering everyone in their world through a particular lens. Towers are practically unstoppable while they remain within their layer, and are immensely powerful outside of them– on the vanishingly rare occasions they *do* actually decide to leave.

## HOW DO TOWERS COME TO BE?

There is no single formula, no simple steps to follow or spell to cast. Some towers arrive fully-formed with their layer, neither one ever knowing a world without the other. Others take up the mantle from a previous Tower, earning their place through strength or commitment. Still others create a layer around themselves, rising to the rank of Tower by fighting against the very tides of the Disparateum. If you're wondering if you can become a Tower, the answer is no. If you've resolved to become one anyway, then you might just have a chance.

HAVE YOU MET A TOWER YET?

REALLY FASCINATING. IT'S LIKE... THEY'RE SO FULL OF LIFE, SO ABSOLUTELY RADIANT, AND YET FOR SOME REASON I ALWAYS JUST WIND UP FEELING SORRY FOR THEM.

I DUNNO. JUST FEELS LIKE IT MUST BE LONELY.

### THE THOUSAND-CHAIR CASTLE

The children built themselves a Tower, in the truest sense of the word. The Castle looms over their layer, guiding and sheltering them as they adventure to and fro.

What influence does it have? Hm, unclear. It might open your heart, let you experience what it's like to be wild and free once again. It might make you act foolish, rash, impulsive. It might make you care deeply about things you haven't in years. Or maybe it just lets you be yourself for once.

### THE SMILING GOD

The Tower of the Refliction is a terrifying thing, an eyeless and smiling god with arms that could catch the horizon. It lurks deep in the Inverse City, twisting hearts and polluting minds. All those who linger in the Refliction too long can feel its laughter scratch at the edge of their consciousness.

For how disturbing it is, however, it seems remarkably disinterested in worlds beyond its own. All its cruel efforts and devious plots seem to merely culminate in protecting the Refliction from outside harm.

### THE RANDOM ENCOUNTER

Nobody knows who or what the Tower of the Refraction is. For all we know, it changes shape with every possible world, or is seen differently by every visitor.

Maybe you cross paths with someone, in the maelstrom of possibilities. You smile at each other, continue your separate ways. Maybe you knew them, in another life. Or maybe not.

### THE PRINCE OF MOTHS

The Abyss is ruled by the Prince of Moths. Thousands of feathery wings rustle in their open chest.

The Prince of Moths is soft, quiet. They don't act when patience will do, but they never, ever loosen their grip. A faint light sits on the horizon, and the Prince wants nothing more than to claim it.

THE KNIGHT ARRIVED EARLY IN THE MORNING. SHE'D TRAVELED FAR TO GET HERE, AND WAS IN NEED OF REST. HER CLOAK WAS WORN AND STAINED AT THE EDGES, THE STRAPS OF HER ARMOR WERE LOOSENING, AND SHE'D SPLIT THE END OF HER WALKING STICK ON A SHARP PAVEMENT STONE A FEW WEEKS BACK. THE CITY HAD BEEN WITHIN VIEW FOR A GOOD WHILE NOW, BUT SHE TOOK A MOMENT TO LEAN ON HER STAFF AND LOOK OUT AT HER FINAL DESTINATION.

THE NAMED CITY SEEMED TO HAVE BEEN BUILT WITH MORE EXUBERANCE THAN SKILL. THE GRAND WALLS THAT ENCIRCLED THE CITY NEVER PROPERLY CONNECTED TO ONE ANOTHER, LEAVING GAPS FOR ROADS TO SNAKE IN AND BUILDINGS TO PUSH OUT. IT WAS LIKE THE ENTIRE CITY WAS A GREAT CLAY BOWL THAT A GIANT HAD DROPPED, AND THE BUILDINGS WERE NOW POURING OUT THROUGH THE CRACKS. ONCE SHE GOT CLOSER, THE KNIGHT NOTICED A WEB OF STAIRCASES, ELEVATORS, AND LADDERS COVERING THE EXTERNAL WALLS, LEADING TO BUILDINGS THAT WERE BUILT INTO OR HUNG OFF THE WALL ITSELF. MAYBE IT WAS MORE OF A BEEHIVE, SHE THOUGHT, WITH THE WALLS ACTING LIKE APIARY FRAMES.

WITHIN THE CITY'S OSTENSIBLE BOUNDARY, THE LAYOUT WAS SOMEHOW EVEN MORE CHAOTIC. HOUSES SQUEEZED BETWEEN SHOPS, MARKETS TUCKED UNDER BRIDGES, WORKSHOPS SQUATTED ON ROOFS AND WALKWAYS, PARKS CLEAVED THROUGH STREET AND ALLEY ALIKE. STREETS LAYERED OVER EACH OTHER, CONNECTED BY A LABYRINTH OF RAMPS, SPIRAL STAIRS, AND ROPE BRIDGES. METAL FIRE ESCAPES WERE BOLTED TO THE SIDES OF STONE TOWERS, AND APARTMENT WINDOWS WERE DECORATED WITH STAINED GLASS.

THE KNIGHT WALKED THROUGH THE STREETS IN A DAZE. SHE HAD VISITED THE GREAT CITIES OF THE WORLD, WITH THEIR SHINING SPIRES AND IMMACULATE STREETS. COMPARED TO THEM, THE NAMED CITY WAS CRAMPED, SLOPPY, AND LOUD. AND YET, SHE FOUND HERSELF ENRAPTURED BY THE CITY IN A WAY SHE NEVER HAD BEFORE. IT WAS VIBRANT, TEEMING WITH ACTIVITY IN A WAY SHE'D NEVER SEEN. CHILDREN RAN THROUGH THE STREETS WITH WOODEN SWORDS, DUELING ACROSS PORCH STEPS AND PARK BENCHES. GATES HIDDEN IN ALLEYWAYS OPENED UP TO REVEAL GARDEN COURTYARDS. PHILOSOPHERS SIPPED COFFEE AND READ THE PAPER ATOP THIRTY-FOOT POLES. CATS WITH GLEAMING EYES SCAMPERED ACROSS CLOTHESLINES HIGH ABOVE THE STREET. TELESCOPES POKED OUT OF TOP-FLOOR WINDOWS, AND CARD TABLES SAT ON BALCONIES. FLOCKS OF KITES DRIFTED THROUGH THE AIR, HIGH ABOVE.

THE KNIGHT WAS SO TAKEN IN BY THE SIGHTS AND SOUNDS OF THE CITY, THAT SHE DIDN'T SEE THE YOUNG MAN IN FRONT OF HER UNTIL SHE'D RUN HEADLONG INTO HIM AND KNOCKED HIM TO THE GROUND.

HE LOOKED YOUNG, WITH BRIGHT EYES AND A MESS OF CURLY HAIR. DESPITE THE TEMPERATE WEATHER, HE WORE A LONG COAT AND A THICK RED SCARF, BOTH OF WHICH WERE DECORATED WITH HUNDREDS OF TINY COPPER ORNAMENTS. HIS HAIR WAS HELD BACK WITH A DOZEN COLORFUL RIBBONS, EACH WITH A TINY BELL HUNG FROM ITS END. HE LAUGHED OFF HER APOLOGIES AND ACCEPTED HER HELP GETTING HIM TO HIS FEET. THE TWO OF THEM CHATTED FOR A BIT, AND HE TOOK PRIDE IN WELCOMING HER TO THE CITY. AS HE WAVED GOODBYE, THE BELLS IN HIS HAIR CHIMED SOFTLY.

IT WASN'T UNTIL AFTER SHE'D FOUND A HOTEL, CHECKED INTO HER ROOM, DROPPED OFF HER BAGS, AND UNSTRAPPED HER ARMOR, THAT SHE REALIZED HER SWORD HAD BEEN STOLEN RIGHT OUT OF ITS SHEATH.

~~ ~~ ~~

THE KNIGHT DIDN'T NOTICE THE TRANSITION INTO SLEEP. SHE DIDN'T NOTICE THE SHADOWS GROWING LONGER, THE WALLS OF HER ROOM GROWI

SHE DIDN'T NOTICE THE SHADOWS GROWING LONGER, THE WALLS OF HER ROOM STRETCHING AND WAVERING, THE FURNITURE MOVING RESTLESSLY. BUT THEN, ALL OF A SUDDEN,

BUT SHE DID NOTICE THE LA

SHE NOTIC

...

SORRY. SORRY, I'M GETTING DISTRACTED. I CAN'T STOP- WELL, I KEEP THINKING ABOUT THIS... THIS PLAY I SAW, LAST NIGHT.

WE'LL COME BACK TO THIS. LET ME JUST GET THIS OFF MY CHEST.

...

ABOVE THE STAGE WERE HUNDREDS OF KNIVES, HUNG FROM THE CEILING ON FRAGILE THREADS.

MOST WERE TIED TO THE RAFTERS, SOME FROM STAGE LIGHTS, SOME FROM CURTAIN RODS. THE CLOSER TO THE CENTER OF THE STAGE, THE LONGER THE THREADS AND THE LOWER THE KNIVES.

THE ACTORS DANCED AROUND THE HANGING KNIVES, NEVER DIRECTLY ACKNOWLEDGING THEM BUT LEAVING THEM SPINNING AND TWIRLING AS THEY RUSHED PAST. INTIMATE CONVERSATIONS ALWAYS TOOK PLACE EXACTLY CENTER-STAGE, THE LOWEST KNIFE SWINGING AND TWISTING BETWEEN THEIR BARE ARMS AND CLASPED HANDS.

THE LEAD ACTOR CARRIED A BOOK IN ONE HAND AND A PAIR OF SCISSORS IN THE OTHER. HE HELD THEM CASUALLY AT FIRST, DANGLING AT HIS SIDES, BUT AS THE PLAY WENT ON HE GRIPPED THEM TIGHTER AND TIGHTER. AT THE CLIMAX OF THE PLAY, GRIPPING THE SCISSORS SO TIGHTLY HIS KNUCKLES BLED, HE

# The Refraction

## Where the Present is Revisited a Thousandfold

**The Refraction**
**Trait– Layer**
The pages skimmed past. Opens when a choice cannot be made, and can be reached by following the tiniest discrepancy.

**[Recover traits by:]** Spotting a moment not lived, a path not walked. Who could you have been, if not this?

**Fractured**
**Trait**
A dizzying storm of possibility. Every consequence of every choice lives here.

**[1 Token:]** Find anything you'd like, but not as you remember it.

**[3 Tokens:]** Splinter off a new world, with new possibilities.

**What could you have been?** The Disparateum is a landscape made of possibilities, and nowhere is this as clear as the Refraction. Every turn of the head, every slight movement, and you find yourself in another world. Patterns emerge gradually, but differences remain stark. Conversations layer over, moments blur with years, you recognize every face but know none of them.

This is a microcosm of all the Disparateum. Condensed, focused, sharpened. If you can find who you are here, you'll never feel lost in the worldscape again.

### Parlor Tricks
An ice cream parlor run by Maggie Morthendain, a powerful wizard. It boasts an incredibly long list of flavors, and a sign behind the counter informs patrons that if they can name a flavor not found on the menu, Maggie will personally hunt it down and add it within a day's time. Because of this, Parlor Tricks boasts a massive, weighty tome of a menu, with flavors found nowhere else in the world, including a hundred or so conceptual flavors and three that defy logic.

### Cut & Restore
A tailoring business run by Maggie Morthendain, a powerful wizard. Maggie has made an incredible variety of dresses, suits, coats, robes, capes, and loungewear for people across the City and the world over, and is always looking for a challenge. She uses strange fabrics and sources her own dyes, resulting in clothes that twist with the light, play with perception, and even toy with your memory. Every event across the City is sure to showcase one of her pieces, and they always turn heads.

### Bait & Switch
A fishing supply store run by Maggie Morthendain, a powerful wizard. It boasts an incredible variety of bait, tackle, rods, gloves, and hooks. A sign behind the counter informs patrons that if they can catch something Maggie hasn't seen before, she'll give them a lifetime membership and put their picture up on the wall. Because of this, Bait & Switch is the one-stop shop for anyone looking to catch rare, theorized, or mythological fish.

### False Shuffle
A dance hall run by Maggie Morthendain, a powerful wizard. The live music is strange and beautiful, the outfits are eye-catching, and there's plenty of hallways, crevices, and side rooms to sneak off to. It seems impossible to go here and *not* run into a beautiful stranger you made eye contact with, an old rival with a new look, or a mysterious admirer who's been asking about you.

### On Recurrence
The Disparateum is a fractal flower with infinite petals. All things are possible here. But are all things *likely*? Some patterns will happen more often than others, and some are nigh-inescapable. Keep your eyes open, and you might pick up on the roots of the world, the patterns that remain even when everything around them shifts.

AFTER THE PLAY, I STUMBLED INTO MAGGIE'S SHOP. SHE KNEW SOMETHING WAS WRONG, CAME OUT FROM BEHIND THE COUNTER TO COMFORT ME, BUT I COULDN'T EXPLAIN IT. COULDN'T GET THE WORDS OUT.

I KNOW HOW THIS ENDS. I DON'T WANT THIS TO END.

I DON'T WANT HIM TO WIN.

### The Blacksmith's Booth

The Old Blacksmith has a booth at the market set up directly in front of his smithy mostly as an excuse to sit in the sun and watch soap operas on a shitty portable TV. His three daughters do most of the day-to-day work these days. Rumor has it that the Blacksmith used to be a real living legend, forging tools and weapons for royalty, adventurers, and minor gods. They say his daughters are part divine, and that their celestial parent visits on solstices to have their armor repaired and spear sharpened. Of course, anyone who's met them knows how absurd this all is–they're just a sweet, down-to-earth family like any other.

### The Blacksmith's Booth

The Old Blacksmith has a booth at the market set up directly in front of his old smithy mostly as an excuse to sit in the sun and listen to soap operas on his dusty cathedral radio. His three daughters do most of the day-to-day work nowadays. Rumor has it that the Blacksmith used to be a real living legend, forging engines and rifles for presidents, leviathan hunters, and sky pirates. They say his daughters are the mythical Sisters of Black Skies, deadly and clever pirates who tore through entire fleets with a single ship and a crew of less than twenty. Of course, anyone who's met them knows how absurd this all is–they're just a sweet, down-to-earth family like any other.

### A Rainbow of Worlds

One theory posits that the Disparateum is not just *similar to* a spectrum but actually *is* one; that every world exists on a continuum, and understanding the "hue" of each world will reveal its secrets. This is absurd, of course. After all, the worldscape may be endless, but it is also discrete: worlds don't blend into each other at the edges, they have clear delineations. And anyway, if that were true, what would the primary colors be? What kind of layers would lie at the Disparateum's furthest edges?

Nevertheless, the analogy can come in handy. Colors are here used to indicate a certain… thematic symmetry.

### The Blacksmith's Booth

The Old Blacksmith has a booth at the market set up directly in front of his old smithy mostly as an excuse to sit in the sun and listen to true crime podcasts on his beaten-up smartphone. His three daughters do most of the day-to-day work nowadays. Rumor has it that the Blacksmith used to be a real living legend, constructing the first man-made warpgate from blueprints drawn up by the Coalition. They say his daughters looked into the blinding void the first time the gate was activated, and they've been different ever since. Of course, anyone who's met them knows how absurd this all is–they're just a sweet, down-to-earth family like any other.

### The Blacksmith's Booth

The Old Blacksmith has a booth at the market set up directly in front of his old smithy mostly as an excuse to watch rehearsals for the local theater in the yard across the road. His three daughters do most of the day-to-day work nowadays. Rumor has it that the Blacksmith ran away once, traveled the world with a legendary circus troupe, building all the props and stage machinery they needed to pull off their impossible shows. They say his daughters aren't real, but are instead elaborate cogwork dolls he built after his true love stole his heart and vanished into the night. Some even believe that his daughters are still searching for that man, in the hopes of someday recovering their father's heart. Of course, anyone who's met them knows how absurd this all is–they're just a sweet, down-to-earth family like any other.

### Hall of Curiosities
A wing of the Museum dedicated to showcasing tools, art pieces, and magical relics taken from cultures throughout history. The exhibit seems to extend endlessly into the distance, the displays showing older and older pieces the further you go. Be careful not to go too far, though, or you might find yourself straying decades or centuries into the past with no obvious way to return. Tours are available, but take what you hear with a grain of salt: the guides are often visitors from far-off futures, and their recollection of events can be muddled.

### Hall of Curiosities
A wing of the Museum dedicated to showcasing tools, art pieces, and magical relics taken from cultures across the world. Many of these were uncovered from dungeons by treasure hunters and monster slayers, but it only became evident why after they'd been brought here–magical items naturally generate labyrinths, traps, and monsters around them over the course of centuries, and this process is dramatically accelerated when many artifacts are collected together. As such, much of the Museum has become a patchwork of dungeons in the styles of civilizations across the world. Tours are available, but have a non-insignificant failure rate.

### Hall of Curiosities
A wing of the Museum dedicated to showcasing tools, art pieces, and magical relics taken from cultures around the world. Instead of being sorted by origin, each section is dedicated to a different common experience: cooking, stargazing, travel, et cetera. The different pieces allow visitors to appreciate both how similar we are across time and space, but also how things we often consider fundamental can actually vary wildly. Unfortunately, a side effect of this layout is that the wing has experienced a "refractive subjectivity collapse," where the perspectives innate in each relic have multiplied and reflected off one another, leading to billions of near-identical exhibits that extend out in all directions. Tours are available, but stay close to your guide: if you can't find the exact way you came in, you'll be unable to leave.

WHEN A DISASTER STRIKES, IT'S ONLY NATURAL TO WONDER IF YOU COULD HAVE DONE SOMETHING DIFFERENTLY. IF YOU COULD HAVE FIXED IT BEFORE IT HAPPENED, IF ONLY YOU KNEW.

### Hall of Curiosity
A wing of the Museum dedicated to showcasing the long and wondrous history of our City.  Exhibits have been heavily vetted to ensure they comply with standards for both accuracy and loyalty. There's no need to dwell on or exaggerate the mistakes of the past, when its glories were so much more important. Tours are available, but questions are heavily discouraged.

### Parchment Tattoo Parlor

Identity's a slippery thing in the Disparateum. It can be hard to hold onto who you truly are when the context of your reality keeps changing, and that's not even counting the stress of running into other versions of yourself. Tattoos keep people grounded, and nobody does them better than the Scribe. Be warned, though, the parlor's pretty hidden. You'll have to climb down a manhole, navigate a maze of sewer tunnels, and pass an abandoned subway station to get to it. It's usually a good idea to ask someone who's been before to guide you.

### Parchment Costume Design

Identity's a slippery thing in the Disparateum. It can be hard to hold onto who you truly are when the context of your reality keeps changing, and that's not even counting the stress of running into other versions of yourself. Sometimes, when you feel lost and uncertain, the only cure is to get up on stage and wear someone else's face for a while. The Scribe tailors beautiful costumes, paints elaborate masks, and never asks uncomfortable questions about what theyre for.

IF YOU HAD, IF YOU COULD...

WHAT WOULD THE WORLD BE LIKE?
WHAT WOULD BE DIFFERENT?
WOULD THINGS REALLY BE BETTER,
OR WOULD IT JUST STAVE OFF
THE INEVITABLE?

### Parchment Tavern

Identity's a slippery thing in the Disparateum. It can be hard to hold onto who you truly are when the context of your reality keeps changing, and that's not even counting the stress of running into other versions of yourself. Times like this, it can be nice to go somewhere where everyone knows your name. The Parchment Tavern is a hole in the wall in the truest sense of the word, hidden behind a tattered poster in a narrow alleyway. Once you crawl through the rough opening, you'll find yourself in a cozy bar, chatting with regulars, playing pool, and getting your usual mixed drink from the Scribe.

### Parchment Mediation Services

Identity's a slippery thing in the Disparateum. It can be hard to hold onto who you truly are when the context of your reality keeps changing, and that's not even counting the stress of running into other versions of yourself. Sometimes, that stress can even drive you to lash out, to do things you regret to another version of you. It's for times like these that people visit the Scribe, whose comfy office hidden in the Reflection is a safe place to meet with other versions of yourself and hash out issues in a guided, respectful way.

AND IF YOU HAD THAT CHANCE,
AND FAILED,

WHAT THEN?

### The Outlook
A tall, narrow hotel building tucked into a corner of the district. It used to be a place frequented by ambassadors and traveling royalty, but as the world outside has become tangled up in its own affairs and the Named City's gone largely ignored, the Outlook's grown quiet. It's still impossibly grand, though. Live music seeps into the twisting hallways from some faraway lounge, gorgeous paintings and sepia tone photographs clutter every available wall, and each room is furnished in a peculiar style and features an incredible view.

IT'S HARD NOT TO THINK ABOUT. TO FIXATE ON.

### The Outlook
A tall, narrow hotel building tucked into a corner of the district. It used to be a place frequented by philosophers and sorcerer-kings, but as progress in the world outside has marched on, the Outlook's been left behind. It's still surprisingly interesting, though. Muffled conversation seeps down from rooms above, bookshelves crowd the winding hallways, and each room is named for a different anatomical feature of the soul.

**Searching for Something**
A place that has one of everything is a terrible place to search for anything. Somehow, despite this, people still try. Maybe you'll find what you're looking for, honestly and truly. Maybe you'll find something close enough, consider yourself satisfied. Or maybe you're not really looking at all.

Finding something in an infinite world is near-impossible. Making something from infinite material, however…

### The Outlook
A tall, narrow inn tucked away at the edge of town. It used to be a place frequented by heroes and politicians on the election trail, but as the world outside has expanded faster and faster, the Outlook's grown still. It's still remarkably cozy, though. Muffled laughter seeps through the floors from the common room below, woodcuts and silver nitrate photographs clutter every available wall, and each room is furnished with thick quilts, a heating stove, and a gramophone.

### The Outlook
A tall, narrow hotel building tucked into a corner of the district. It used former glory, it stands as a monument to the power and influence of the Named City's gone largely ignored. Ambassadors and distant royalty stay here as they work to complete the City's transformation grown quiet.

BUT ALL THAT'S JUST...

WAIT. SOMETHING'S WRONG.

### The Outlook
A tall, narrow hotel building tucked into a corner of the district. It used Restored to its former glory, it stands as a monument to the power and influence influence influence of the Named City's new leader. Ambassadors and distant royalty stay here as they work to complete the City's transformation into the seat of a new empire.

### The Outlook
A tall, narrow hotel building towering over the district. Restored to its former glory, it stands as a monument to the power and influence of the Named City's new leader. Ambassadors and distant royalty stay here as they work to complete the City's transformation into the seat of a new empire. May the Disparateum stand forever.

WHAT'S HAPPENING?

**What happens when you finish the story?** What lies after the happily ever after or the tragic denouement? Do they sleep, resting until they're needed again? Do they continue on endlessly, only to be dragged back to the start when the next telling begins?

What happens when a story is forgotten?

The Surreal is the Disparateum's dumping ground for stories, an afterlife for narrative elements. Enchanting castles and unsettling manors lie piled up on the outskirts, gods and heroes wander without purpose, dreams and myths mingle with the wastewater and pour out into the collective unconscious, to be filtered back into the worlds above. Everything winds up here, in time.

## The Edge of the Woods

The fog of understanding, the sound from the dark. Things lurk in the woods, unknown things, dangerous things.

### The Hiking Path

A single path winds through the wood. It's lightly trod, its markers obscured, but it will take you where you need to go. Lose your way, and finding the path is your only hope.

### The Goblin Market

Mostly not actually goblins; the stalls here are filled with all manner of sprite, fae, and kubold. Here, you can buy cracked bowls, lost earrings, bent needles, torn photos, stopped watches, and all manner of other useless and broken things. Meaningless favors and worthless junk a your currency; be prepared to waste your time if you vis

### How It Was Forgotten

The unknown became known. The thing in the woods becomes a lot less scary when you realize it's just a person, same as you. There's always more unknown to find, of course, the circle always has a circumference, but the people of the City now meet it not with dread, but joy.

# The Surreal

## Where Forgotten Stories Collect Like Silt

### The Surreal

**Trait- Layer**

The ever after. Opens when the narrative becomes too elaborate to keep track of, and can be reached by those left out of the story.

**[Recover traits by:]** Examining what role they've played in the narrative.

### Abstract

**Trait**

There's no line between the literal and symbolic here. Every action and object is heavy with meaning, waiting to erupt out at any time.

**[1 Token:]** Take literal action on a metaphorical subject, or vice versa.

### Forgotten

**Trait**

Everything any player ever said during a session that didn't become part of the game wound up here instead.

**[1 Token:]** Bring back a joke.

**[3 Tokens:]** Take it seriously, this time.

### Travel

Distances in the Surreal are ill-defined. You'll often see towering structures in the distance, but if you try to reach them they simply glide along the horizon or vanish entirely. It's much easier to reach things through association, as every castle has a secret tunnel to every other castle and every skyscraper has a button in another building's elevator. Failing that, try getting lost.

# The Drifting City

A cluster of airships high above the landscape, each one bearing a neighborhood in flight. The ships twist around one another, constantly rearranging and reconnecting. The City's residents step confidently from one shifting gangplank to another, casually hopping gaps over mile-high drops seemingly without fear.

### Residential-Ship

A massive airship with a wide deck, its outer hull dotted with thousands of apartments. The interior of the ship is occupied entirely with boiler engines, maintenance hallways, and workshops, so for ease of travel between apartments most residents simply use the web of rope ladders and zip lines hung from the outer windows of the ship.

### Market-Ship

Tents and carpets layer over one another like multicolored fungus, completely covering every inch of this ship's surface. Traveling through the market involves slipping through narrow gaps or pulling aside the fabric of one tent to find yourself in another. As such, you never know what you're about to find, and rarely will you find your way back to a tent you've already seen.

### Garden-Ships

A set of two dozen smaller ships tethered together permanently with rope bridges and covered in greenery. Many ships grow crops, providing fresh food to eat alongside the supplies traded for whenever the Drifting City flies over a port. Some are simply beautiful places to gather or explore. The ships' lower decks teem with life too, with bioluminescent plants and strange mushrooms cultivated in the c cabins.

### Castle-Ship

A grand stone fortress, held aloft by beautiful wing-shaped sails. Inside is a labyrinth of grand halls, libraries, secret passages, an servant quarters. There's no royal family anymore, if there ever w so the residents here are free to wander from grand bedroom to extravagant dining hall to somber war room as they please.

### How It Was Forgotten

The story goes that the Named City once picked itself up and crossed the world, to settle at its edge. Perhaps it really did fly. Recent historical finds have challenged the narrative, however, and nowadays it's mostly considered a fable.

### Combining and Coexisting

No story exists in a singular form. Every character, every location, every event plays out differently in each telling, and is interpreted differently by each listener. So, what happens when different versions of the same character, or the same place, wind up here?

There's two possibilities: usually, they merge into one entity, with all the contradictions that entails. This is why buildings in the Surreal are always bigger on the inside; they have to contain more rooms than they should be able to, to [illegible] there.

# Undefined, the Last City

Built at the end of the Physical Era, Undefined was meant to be a bold stride into the future. The glass-and-steel dream of a hundred billionaires, a thousand architects, and eight hundred thousand engineers, Undefined was to be a place where technology solved every problem, where none went without. It seems they only accomplished that dream for the penthouse suites, and left the rest of us to dream of what could have been.

### Throne Industries

The central district of Undefined is dominated by skyscrapers, and among them none stand taller than Throne Industries HQ. Beginning life as a humble military contractor, they quickly branched out to run the world's most popular search engine, most profitable online storefronts, and most omnipresent surveillance systems.

### The Chrome Market

A roaming underground market, run out of the slums and sewers under the City. Cybernetic limbs hang like curtains in front of surgeon-stalls, wireheaded androids stand around to be used as target practice, and memory chips get passed around like party drugs. This place used to stay on the cutting edge to keep ahead of regulations, but with the Whitelist Reforms of '33 everything sold, done, or said here is illegal until proven otherwise.

### [illegible]ortal

[illegible]of a particularly gifted hacker, now a tear in [illegible]s up into the online realm. A community [illegible] it, using their programming skills to delve [illegible]o extract valuable assets as real-world [illegible]t new structures into the ever-shifting internet landscape. Some even search for the original hacker, [illegible] built a world for herself somewhere inside, [illegible] that utopia.

### How It Was Forgotten

Every future is mired in the present. As we change, so does our view beyond the horizon. And for Undefined, someone else's vision of tomorrow took over.

# The Flooded City

Once, in ages past, the gods thought the City so beautiful that they drowned it out of jealousy. Ever flawless, however, the city simply too floodwaters and incorporated them, turning from a single shining mo to an ever-shifting mirage.

### The Grand Machine

The entire city is supported by a massive system of hydraulic cylinders powered by the waters beneath. Over the course of a day, district-plates will rise and fall in relation to each other as water pressure is diverted from place to place, revealing hidden secrets at their borders; basements turn into porches and shopfronts as plates lift, and rooftops turn into streets and gardens as they fall. Long-time residents hop gracefully across boundaries as the city restructures itself, while visitors grab on tight and wait for the shaking to stop.

### The Fountain Garden

Dozens of water fountains in a sprawling park. The leaping water from each fountain is carefully arranged to create the impression of human forms, the rising and falling of the water creating the illusion of action. These temporary statues can be seen leaping and falling, rising and collapsing, shouting and falling silent, only to beg
If you watch them long enough, you might even b

### Icepillar Music Hall

A grand venue carved from delicately-enchanted
past resonates within the walls here, each new pe
layer to the symphony of ages. Sit for a while, let

### How It Was Forgotten

No sudden change, no shift in values. Sometimes things just... slip away from us. It's the smallest, most consistent tragedy of all.

### Directions

The Drifting City is up, and the Flooded City is down. Undefined is topside while the Basement is bottomwards, the Front is charm and top, Timenosaurs HQ is charm-by-charm-down, and the Anything Grove is strange.

Hope it helps!

### Combining and Coexisting (continued)

But sometimes a story has grown so much, changed so drastically in the retelling, that combining them is just impossible. In that case, different iterations of a character or location can exist simultaneously. Sometimes there's a culture gap, with each representing a different society's take on the same tale. Sometimes it's just a matter of gradual evolution. Regardless, they tend to get along well, if cautiously, and try to keep from stepping on each others' toes.

# The Basement

Not every idea is widespread. Not every story is shared. Here, in the vast underground, live all the little narratives that never got to see the light of day. Characters from unfinished manuscripts, forgotten imaginary friends, rumors that petered out and died before they'd reached a handful of ears. The other residents of the Surreal don't shun them, exactly, but everyone knows they don't belong. They're lacking in substance, in perspectives. They've only been known one way, often by only one person. That's no way for a story to live.

# The Front

Here, primordial forces of Good and Evil shatter the land in their titanic, endless war. Here, the fate of all that exists will be decided. Here, demons and angels roam.

### The Ivory Bastion

A massive and featureless off-white cube, driven partially into the earth. Inside, it's an endless labyrinth of corridors, war rooms, armories, and medical facilities. The hosts of angels who reside here wear armor of flowing silver and bear weapons of trapped lightning, and when they feel themselves losing a fight they drop bombs of liquid crystal to preserve the battlefield in beautiful pillars of unbreakable glass.

### The Temple of Obsidian

An enormous inverted pyramid, hovering far above the clouds. The three-headed demons that make up the Temple's army are reborn here from pools of saltwater and blood, armed with swords and bows made of moonlight, and dropped directly onto the battlefields below.

### The Inner Circle

A small purple sphere, far from the war effort, where the sixteen-winged Emperor of Angels and the nine-headed President of Devils reside and plan their war over glasses of scotch and rounds of golf. Every victory, every casualty, is carefully considered to ensure the endless continuation of the war.

### How It Was Forgotten

Good and Evil hold little sway over the Disparateum nowadays, leaving these primordial forces to their own devices. It's unclear what would happen should one side defy their lords and actually win.

The Basement is lonely, often harrowing. It's a difficult place to thrive in. But, if nothing else, its inhabitants have each other. And really, all any lost story wants is to be known.

# Timenosaurs Headquarters

An asteroid hangs over the prehistoric world. In mere hours, it will crash into the earth, sending waves of annihilation across the planet's surface. Deep in a secret underground bunker, a desperate team of dinosaurs work against the clock and their own walnut-sized brains to escape their grim fate. There! A breakthrough! The secrets of the universe open up to them, and they gain access to the power dinosaurs have longed for since the dawn of their age: time travel. Equipped with the finest technology made by tiny, stubby hands, they venture through a rift in spacetime, to meet their destiny in the world beyond.

### The Team

Ronto is the brains behind the operation, head researcher and man-in-the-chair. Ocira is the field engineer, using her quick wit to devise solutions to unexpected problems. Dacty's a daredevil and ex-pilot, always looking for a chance to show off. Finally, Rannosa's the billionaire patron of the team, willing to pour endless resources into the project but demanding timely results.

### Their Mission?

To avert the apocalypse, and set right the horrible dinosaur-less world they find themselves in.

### How It Was Forgotten

Frankly, it's a little unclear how this one took hold in the first place. It's rather silly.

# The Anything Grove

Rows and rows of perfectly manicured trees, stretching beyond the horizon. The fruits grown here are incredible; acres of every variety of apple, every possible citrus, every kind of nut. Beyond them are hybrids, mixing and matching to make some of the strangest fruits in the Disparateum. Beyond *that*, carrots and potatoes and pumpkins hang from branches, then cuts of chicken and bottles of spices, then computer and car parts, furniture, power tools, sporting equipment, paintings, pillows, mugs, light bulbs, dice, movie memorabilia, bones, and clocks. Beyond them are trees that grow elements, water pouring from branches or flowers that house embers. Beyond that, even, are platonic trees growing shapes and colors and concepts.

Find a plot of dirt. Dig a little hole. Drop something into it, anything at all. Cover it back up, water it twice a day, and it'll sprout roots. It'll grow into a tree all its own.

They say this is where the gods began their work. First they

**Storyfall**

Narratives do not die gently here. A story leaving our world does so quietly, without notice, but in the Surreal they crash down to earth with incredible violence. People and monsters, monuments and buildings, even entire landscapes will occasionally drop from the sky and flatten anything underneath. You'd think this would mean the world is heavily scarred, but strangely not: the pieces always seem to line up after the fact, and everyone picks themselves up and goes about their day. Even the parts of the world that wind up crushed work their way back up to the surface, or turn into forbidden underworlds or lost continents.

# Rite of Way

### For Seeking Answers From a Higher Power

Our heroes know there are forces beyond their ken. Their lives are shaped by arcane patterns and ancient symbols. Their world is torn, explored, changed, reverted, cracked open, stitched together, forgotten, and rediscovered. So, what's one to do when the world is unknowable, when the tangle of fate becomes too dense to cut through?

Well, why not ask the shapers?

**[To the Guidance-Seeker:]** What is your question? What rites send your question beyond and above the world?

Step away from the game. Leave the fiction we've created, and discuss as your true selves.

**[To Each Player, In Turn:]** What do you know that the Guidance-Seeker does not? What do you seek to convey?

Return to the game.

**[Once Again, to Each Player:]** Place a secret mark somewhere in the Disparateum. The Guidance-Seeker alone can see these marks, and will know that each one guides them along the correct path.

THE KNIGHT DIDN'T NOTICE THE TRANSITION INTO SLEEP. SHE DIDN'T NOTICE THE SHADOWS GROWING DARKER, THE WALLS OF HER ROOM STRETCHING AND WAVERING, THE FURNITURE SHIFTING RESTLESSLY. BUT SHE NOTICED THE LANTERNS. COLORFUL LIGHTS BEGAN TO SEEP THROUGH HER CURTAINS AND DANCE ACROSS THE BREATHING WALLS, LURING HER FROM HER BED. THE KNIGHT LAY THERE, WATCHING THE COLORS DANCE, BEFORE THROWING OFF HER BLANKET AND STRIDING ONTO THE BALCONY.

THE STREET WAS CROWDED BELOW, THRONGS OF PEOPLE SWIRLING AROUND EACH OTHER. MUSICIANS PLAYED FROM WINDOWS, PORCHES, AND THE BACKS OF WAGONS. RIVALS GREETED EACH OTHER LIKE OLD FRIENDS, ARMS CLASPED AND HEADS THROWN BACK. OPPOSITE THE KNIGHT, WINDOWS WERE BEING FLUNG OPEN, CURTAINS PULLED BACK, AS THE PEOPLE OF THE CITY MET THE NIGHT WITH WARMTH AND EXCITEMENT. AND OVERHEAD, JUST ABOVE THE ROOFTOPS, THOUSANDS AND THOUSANDS OF GLASS BAUBLES FLOATED THROUGH THE AIR, ILLUMINATED FROM WITHIN.

A GENTLE NOISE BROUGHT THE KNIGHT BACK TO ATTENTION. THE FAINT TINKLING OF BELLS. THERE, IN THE STREET, THE THIEF WAS PASSING JUST BENEATH HER! SHE TOOK TWO STEPS BACK, STEADIED HERSELF, AND VAULTED THE BALCONY.

SHE'D AIMED TO LAND ON THE ROOF OF A NEARBY CART, THEN HOP DOWN TO APPREHEND THE THIEF, BUT INSTEAD FOUND HERSELF DRIFTING GENTLY THROUGH THE AIR. SHE WATCHED AS THE THIEF SLIPPED THROUGH THE CROWD, SEEMINGLY MOVING FASTER ON THE GROUND THAN SHE COULD FALL. WHEN SHE FINALLY LANDED (THE CROWD PARTING CASUALLY TO ABSORB HER), SHE COULD BARELY MAKE OUT HIS COAT UP AHEAD.

IT WAS LIKE TRYING TO RUN THROUGH MUCK. THE CROWDS OF PEOPLE SHIFTED AND MOVED IN A RHYTHM SHE COULDN'T GET A HANDLE ON, SOMETIMES OPENING UP TO LET HER TAKE LONG LEAPING STRIDES AND JUST AS QUICKLY PRESSING BACK IN. THE STREETS THEMSELVES SEEMED TO FIGHT HER, STRETCHING AND TWISTING EVEN MORE THAN THEY DID IN WAKING. EVERY TIME SHE FELT LIKE SHE RECOGNIZED WHERE SHE WAS, THE THIEF WOULD TURN A CORNER AND SHE'D BE LOST AGAIN. AFTER WHAT FELT LIKE HOURS, THE CROWD SUDDENLY PARTED AND THE KNIGHT FOUND HERSELF STANDING BEFORE THE THRONE OF A GOD.

THE THRONE WAS A CITY BLOCK WIDE, COMPOSED OF AT LEAST A HUNDRED DIFFERENT BUILDINGS ALL STACKED ATOP ONE ANOTHER. THE EDIFICE HAD BEEN PAINTED GOLD IN AGES PAST, BUT NOW ONLY TRACES REMAINED IN THE CREVICES OF STONE AND CONCRETE.

ATOP THIS THRONE, THE GOD ITSELF WAS A STRANGE, SICKLY-LOOKING THING. ITS SKIN WAS A LIGHT GRAY STREAKED WITH BROWN AND SILVER, AND LOOKED AS WRINKLED AND ROUGH AS TREE BARK. RIDGES ROSE UP AROUND ITS SHOULDERS AND DOWN ITS BACK. ITS BODY WAS LONG AND FRAIL, WITH LEGS LONG ENOUGH THAT EVEN ON THIS ENORMOUS THRONE, ITS KNEES JUTTED UP INTO THE SPACE OF ITS PROTRUDING RIBCAGE AND NARROW CHEST. FOUR ARMS EXTENDED OUT FROM ITS WIDE SHOULDERS. TWO OF ITS ARMS RESTED ON ITS THRONE, LONG SILVER NAILS DIGGING DEEPLY INTO THE STONE. THE THIRD HUNG DOWN BETWEEN ITS LEGS, ITS PALM LYING OPEN ON THE STREET BELOW. ITS LAST ARM SUPPORTED THE CHIN OF ITS PERFECT OVAL OF A HEAD AS IT SLUMPED ALMOST COMPLETELY OVER. EVEN LEANING, ITS HEAD HUNG JUST ABOVE THE ROOFTOPS. THE CLOSEST THING IT HAD TO A FACE WAS A HAPHAZARD SCATTERING OF LUMPS AND DIVOTS WHERE ITS EYES WOULD BE. IT HAD NO MOUTH, BUT THE KNIGHT COULD SEE ITS RIBCAGE GRADUALLY EXPAND AND CONTRACT. OTHERWISE, IT WAS ENTIRELY STILL.

IN ITS EXTENDED PALM, PEOPLE HAD PILED NUMEROUS GIFTS: PILES OF FLOWERS AND GOLD, BOOKS AND SWORDS, FANCY CLOTHES AND SCRAPS OF FOOD. THEY HAD PILED THE GOD'S PALM HIGH, THEN CONTINUED IN HEAPS SPILLING OFF THE EDGES ONTO THE STAIRWAY UNDERNEATH AND EXTENDING IN EVERY DIRECTION. FROM A DISTANCE, IT RESEMBLED A CHILD LETTING SAND SIFT THROUGH ITS HAND.

THE LANTERNS STREAMED INTO THE SQUARE FROM ALL DIRECTIONS. AS THEY APPROACHED THE GOD, THEY WOVE TOGETHER INTO COMPLICATED PATTERNS BEFORE SPIRALING UP INTO THE SKY. THE KNIGHT TRIED TO MAKE THEM OUT AS THEY ROSE, BUT IT WASN'T LONG BEFORE THEY WERE LOST AMONG THE STARS.

...

I WORRY ABOUT HIM.

I KNOW THAT'S STUPID. HE'S A DANGER TO ME, TO EVERYONE. WHY SHOULD I SPEND MY TIME WORRYING ABOUT HIM?

AND... YEAH. THAT'S TRUE. BUT HE WASN'T ALWAYS LIKE THIS, RIGHT? HE'S DESPERATE FOR SOMETHING, AND HE THINKS ALL THAT POWER IS GONNA GIVE IT TO HIM. HE THINKS CONTROL WILL GIVE IT TO HIM. AND IT WON'T. I JUST WISH HE COULD SEE THAT.

BEFORE... BEFORE HE...

# The Inevitable

## Where the Future is Shattered Underfoot

**The Inevitable**
**Trait– Layer**
The ultimate fate. Opens when Alexander demonstrates his superiority, and will reach you by crushing anything in its way.

**[Recover traits by:]** Submitting to Lord Alexander's will.

**Inviolate**
**Trait**
A bulwark against change, a sanctuary free of growth and transformation.

Players can't spend tokens to influence this layer.

*If the world is doomed to spin towards destruction, then I shall draw a line. This far, and no further. If everyone has the power to change fate, if anyone can tamper with the world, then invariably it will be poisoned by their tampering. With this, I'll butcher change itself. I'll shape a perfect moment and keep it there, prevent the world from being dragged down by the degenerate mass. If they won't play by the rules, I'll make the rules Inviolate. If they will fight against the tide, I will make the tide Inevitable.*

*This is the end, Player. Make peace with it, and die.*

# Outskirts

The City stands alone, a gleaming beacon of light in a world of desolation and chaos. A plane of barren, rocky desert extends in all directions, a reminder of how much we have to lose if we stray from the path of perfection. Come inside, traveler, join us in the future– if your paperwork is all in order, of course.

### The Walls of the Named City

The walls here used to be utterly riddled with gaps, holes, and secret passages. These have all been rectified. The City is now safe, comforted from all sides by grand, unblemished fortifications. Watchtowers sit, evenly-spaced, to protect us from external threats and observe us from above. Houses that were once built into the porous wall have been demolished, their unregistered residents cast out. Every entrance has been sealed but one, and a grand gate has been constructed to bar the way for all but those most deserving.

### Interlayer Security

To protect the sanctity of the City from those who would seek to destabilize it, we must secure each and every path into it from elsewhere in the Disparateum. Only those that can be properly incorporated into the fabric of the City will be granted permission to enter.

### The Amber Mines

Great mines stretch deep beneath the City, burrowing through the metaphoric strata into worlds and ages past. Miners here collect globs of red-gold amber, useful in a whole host of developing technologies. Tremors occasionally shake the City above, reminding us all of how glorious our future is and how much has been sacrificed to reach it. And sure, a few neighborhoods have collapsed as the ground beneath them was hollowed out, but these tragedies are worth it to strengthen the City as a whole.

### The Undercity

Much of what was once the Undercity has been torn down and hollowed out, to make room for the network of mineshafts and the infrastructure to maintain and expand them. This had the added bonus of driving out many of the City's undesirables, including the several Blood Art schools that had not voluntarily incorporated themselves into law enforcement.

# Industrial District

Where progress is made! This sprawling district is where the majority of the City's populace spends every waking moment, driving the wheels of progress inexorably forward. Power lines drape the streets, smokestacks tower over the horizon, and satellite dishes and CCTV cameras sprout like fungus from every building corner.

### Workhouse District

The people have grown lazy and weak, fed as they were by the Disparateum's bounty. They must be broken in, taught the value of work. Luckily, the newfound industry of the City has need for endless man-hours: materials to be refined, products to be manufactured, warehouse shelves to be stocked, packages to be shipped, flawed goods to be destroyed, refuse to be buried. Through this cycle, we rise ever higher.

### The Amber Market

After a long day of work, come down to the market stalls and relax. Here you can buy any wondrous thing you can imagine! Perfect to display on countertops and shelves, to hang from walls or decorate your bathroom. Be sure to keep up with the latest trends! Glassy-eyed peacekeepers stand between each stall, gently snarling whenever you stare too long at the displays without reaching for your purse.

### Goldsaint General Hospital

It's important that the populace remain functional, so they can continue their valuable work in service of this grand City. Recently, several citizens have come down with severe respiratory symptoms, and examination has found trace amber in their lungs and bloodstream. Experts assure us this is perfectly normal, and the long-term health risks have been exaggerated by fearmongers and naysayers.

### Ruins of the Tattoo Parlor

The former hideout of a traitor to the City, caught trying to break open unlicensed gateways through the Disparateum. The path to the Parlor was obscured by the labyrinthine undercity, shifting to confuse anyone who hadn't visited before. All it took was dragging his half-alive body along and the path laid itself out!

**Currency in the Inevitable**

The old ways were sloppy and disorganized, unbecoming of a City of this caliber. Barter is far too inconsistent, too subjective, it fails to account for the innate objective value of things. And using foreign currencies? Forget it.

The City now mints its own coin, and accepts nothing else. One side is embossed with the Throne, the other with the face of Lord of Scriptures. No other form of trade is allowed within these walls.

**Observation**

For the safety and security of all citizens, every public and private space in the City is under constant surveillance. We thank you for your cooperation.

# Throne District

Here, at the heart of the City, we celebrate power in all its forms. Here live and eat those who steer our grand ship, whose commands from on high echo through the ears of every lowly worker. And no voice rings clearer than that of our distinguished leader.

### The Outlook

A tall, narrow hotel building towering over the district. Restored to its former glory, it stands as a monument to the power and influence of the Named City's new leader. Ambassadors and distant royalty stay here as they work to complete the City's transformation into the seat of a new empire. May the Disparateum stand forever.

### The Courthouse Block

A sprawling section of the Throne district has been converted into densely packed courthouses, topped with hundreds of offices to process the paperwork incurred. The courts have a long backlog of work, retroactively prosecuting every crime committed in the City's long history. When the original criminals are unavailable, sentencing instead applies to their co-conspirators: family, friends, associates, ancestors. Absence is an insufficient defense, and the law must be upheld.

### Luxury Apartments

Throne is the home to the finest accommodations in all the City, for those who can afford them. Many of these are inheritances, passed down through renowned and influential family lines. It's rare that such homes become available, so you're in luck! Three such apartments opened up just this week, and touring will become available once they figure out how to excavate the rooms absorbed by amber.

### Glasspillar Music Hall

Built into the back of the Throne itself is an enormous concert hall, boasting a gorgeous amphitheater, plentiful tiered seating, and no less than three gift shops. After extensive renovations, it now serves as the home of approved arts and recreation in the City, as well as the Lord's personal press office.

### The Lord's Home, The Seat of Power

High above the City, Alexander watches from his penthouse. He watches as the little people scurry below, acting out the roles he's assigned them. He watches as the City slowly reshapes itself in his image. It's not perfect yet, he thinks to himself. But it will be, soon.

*There has been too much abstraction, too much lay interpretation. The Disparateum has been lax with you, Player. No longer.*

*You have played fast and loose with the sacred geometries of my world, obeying them only at your convenience. But my world is not your toy, and you no longer make the rules.*

*I do.*

**Dreaming**

The City no longer shares in its dreams. Sleeping citizens are given a brief, dark reprieve, and then must wake up and head back to work.

Shadows move across your vision, silent outlines on the horizon. They reach out to you, desperate for… something. They're forgotten the moment you wake.

# Ritual of Ending

## For Surrender

It's too much. It's too much. What could you possibly do?

**[To the Knight:]** Repeat: *I don't matter. I never mattered.*

**[To the Thief and Bard:]** Repeat: *This story no longer belongs to me.*

**[To the Seer and Mage:]** Repeat: *I am powerless in the face of this.*

**[To the Scribe:]** Repeat: *Nothing I can do will change this.*

Continue to repeat until your voice goes hoarse.

[redacted]

[redacted] e. [redacted]

[redacted]

[redacted] es [redacted]

[redacted]

[redacted]

[redacted]

[redacted] m [redacted] of.

[redacted]

[redacted] em [redacted]

[redacted]

READ BETWEEN THE LINES.
HUNT FOR HIDDEN MESSAGES.
ALWAYS DIG DEEPER.

HE WANTS YOU TO BE COMPLACENT,
TO ACCEPT THIS ALL AT FACE VALUE.
DON'T FALL FOR IT.

# The Abyss

## Where the Lost go, to be Forgotten

### The Abyss
**Trait– Layer**
The end. Opens when death claims you, and closes behind you. Accessible only through great sacrifice.

You can't recover traits here.

### Draining
**Trait**
Set a five-minute timer. When it ends, you succumb to despair and are trapped here forever.

**[1 Token:]** Reset the timer.

### Sealed Away
**Trait**
You can't access other layers from here. Escape is impossible.

**[1 Token:]** Strain against the firmament of death, before collapsing under its weight.

### Ultimate Price
**Trait**

**[9 Tokens:]** Surrender yourself to the Abyss, but give someone else a brief window to escape.

**What lies beyond?** Silence, and stillness, and eternity. The Abyss sits at the very base of the Disparateum, waiting quietly for all of reality to slip, piece by piece, into its open maw.

It's quiet here. Not the muffled quiet of winter, or even the still quiet of the grave. It's quiet like the moment you don't speak up, don't reach out. Quiet like the sharp realization that the moment you're in has become the moment that was, that the window has closed and the opportunity flitted away like wind over water. It's a single fraction of a fraction of a moment of quiet, dragged out to infinity. The quiet is the only thing that's unbearable.

# The Bones of Kingdoms

The Abyss is dotted with dead civilizations, forming concentric circles like the rings of a tree. Most of the dead keep to the center, residing in the echoes of their former lives, but some have taken up residence in these impossible ruins, and even a few remain from the times they were new.

### The Empty Lake

The Abyss is encircled by a great body of water, impassable and infinite. Some try to escape by sailing off to the black horizon, but they always wash back ashore. If it were that easy, nobody would be here.

*…c…*

### The Old King's Roads

In an ancient era, the entire world was connected by roads like these. It's said that when the Named City picked up and left its original home, it followed a thoroughfare straight to the edge of the world. As empires crumbled and time marched on, however, these roads fell into disrepair. Every brick that sunk into the dirt, every sign that rotted away from the elements, they all wound up here. The great tragedy, of course, is now they have nowhere to go.

### Underside of the Vault

Near the edge of the Abyss, a massive disk is lashed by chains to the sky. Shades gather beneath it, shoulder to shoulder, waiting for something to happen. Sometimes a few will give up and wander off, to find another way to occupy their time here. Sometimes more will join, silently adding to the throng. But most simply… wait.

### The First Land of Men

The hallowed grounds where humankind first rose up and invented itself. It was here, on these dusty plains, between these jagged rocks providing just the slightest bit of cover from the harsh winds and rain, that the first human being looked to the sky and said, in a language lost to time, "something must matter."

It's quaint, by modern standards. Feels like visiting your childhood home and realizing the slide was never as big as you thought it was. There's some ruins, some old stone circles implying buildings and fire pits and graves. Old meeting-places for people born ten thousand generations before yourself. Here's where they ate, and spoke, and fucked, and shat, and died. They lived in a world so unlike your own, but still they understood themselves as you understand yourself now. Still they knew that one singular truth.

### On Death

Your shade begins to take form here early in life; with every memory forgotten, with every mistake made, your sleeping shade grows more substantial. Then, when you die, your shade wakes up, and finds itself here.

### Avoiding the Abyss

Cheating death is easy. Escaping the Abyss is not. Better to keep from dying in the first place; drink the nectar of extinct flowers, carve glyphs into your soul, ascend beyond physical form, blaspheme against the natural order. Failing that, you can always be replaced; many iterations of you exist across the Disparateum, and as long as your loved ones are okay with the occasional discrepancy, taking on the burdens of a different branch of yourself is a great way to carry on.

# Ritual of Annihilation

## For Striking Words From the Book

Not all things belong in our story, and sometimes something must be excised fully before the story can continue. Here is a sharpened knife, for just that purpose.

**[To the Seer or Bard:]** Locate the vital thread. What makes this story worth telling? What makes this character ring true?

**[To the Thief or Mage:]** Stretch it to its limits. What would make this thread untenable? What would make it dull, lifeless, unworthy of being examined?

*…c…old*

**[To the Knight or Scribe:]** Cut the thread. How does this story come to an end? Why will we never continue it?

**[To Everyone:]** Where do we go next?

# The Old City

A haphazard pile of necropoles. Buildings spill out over themselves or intersect in strange ways, as dead places compete for space they shared comfortably when spread out across time. Stairways carved from garden walls lead to porches dropped on rooftops, ladders made of fences lead to windows tilted at preposterous angles. There's signage to guide one by, but it too is stacked so densely that the instructions all cancel out.

### The Apartment Labyrinth

Spirits don't need shelter, so there's no reason for them to cluster in the millions of tiny homes and apartments that fill every corner of the Old City. They do anyway. Some continue their routines from life, watering dead plants and cooking insubstantial meals. Others sit motionless, on beds or in armchairs, letting centuries pass them by. Still others have formed little communities with their neighbors, often assisted by the way apartments will overlap or open directly into each other. They keep remarkably busy, for a people with nothing left to do.

### Lost Letters Office

A network of hallways, offices, and sorting rooms. Every letter left undelivered winds up here. At first, you'll find those lost in the mail: letters with incorrect addresses, insufficient postage, destroyed by sorting machines or fallen out of satchel bags. Then come the letters that never even entered the system, stuffed into drawers or thrown into fireplaces without being sent. Then, the letters half-finished and forgotten; then, the letters drafted in one's head and never committed to paper. Finally, you'll find the letters you never had a chance to write, the ones that say things that never occurred to you until it was too late.

### The Theater

It's been in better shape. The pillars are sagging, the windows are cracked, the walls are still scorched and ash-stained. But it serves its purpose nonetheless. The residents here put on autobiographical plays, meandering through the events of their life in an almost stream-of-consciousness performance. Unshackled from a need for food or rest, these plays can go on for months without end.

### The Sand Garden

A barren stretch of sand winds through the heart of the Old City, dotted with startlingly realistic statues. Care has been taken to replicate every last detail, down to the eyelashes and swirls of a fingerprint. If you look closely, you'll see the statues aren't carved from stone, but assembled grain by grain from the fine sand. No wind threatens their delicate features, no running children or distracted pedestrians risk knocking one over. Each statue must take an aeon to create, an unimaginable labor of love. The garden has tens of thousands of them.

*…so cold*

### On Permanence

Souls don't reside here forever, it seems. The Abyss may be wide, but the gulf of time is wider. There should be many, many more souls here. It can't be that people keep escaping. Nobody escapes, you know that. Not really. Not truly. So, why the discrepancy?

I don't know. Maybe one day, we'll meet there, and you can tell me.

TAKE SOME TIME. LET YOUR EYES ADJUST.

# Ritual of Beginning

## For Recalling Why We're Here

A long time ago, by chance or fate, a man found a book.

**[To the Lord:]** What is your unending mission? *To free my beloved world from meddlesome influence. To purge the world of foreign poisons. To seal away the Disparateum forever, so it may be pure at last.*

The book was never meant to be found. Never meant to be read. It had been stolen, ripped from its cradle by the first Thief in a time before stories.

**[To the Lord:]** Can you be stopped? *No, of course not. At my fingertips is all the power in the world, all the power in every world. The Disparateum gives up its secrets freely to me, and all its arsenal is at my command.*

The book has traveled long to get into your hands. It has chanced destruction untold times, it has been left forgotten in vaults and attics and under furniture. It has been desperately copied under candlelight to save it from the pyre, and has been lovingly glued back together when its pages were torn and scattered.

**[To the Lord:]** And what will be left, when you finish your work? *What do you mean? A perfect world, that's what will be left. A paradise, crafted by divine hands and unsullied by interlopers. A paradise!*

*…What do you mean?*

**[To the Players:]** What will you do now?

*Ugh, I will never be able to stomach this messy repetition.*

**SIDEBARS**
This book features a number of helpful sidebars, which expand on and provide context for various things brought up in the primary text. It may also feature a number of annotations from a or multiple prior wielders of this book, the accuracy of which unfortunately cannot be verified by this book's author. If you find the desire striking you, please feel free to add your own annotations.

# DISPARATEUM

Welcome! Whether it's a slim, neatly-printed volume, a crackling leather-bound tome, or a stack of disorganized papers stolen from a dying man, the book in your hands is special. Every other book contains a world, beautifully preserved between its pages like a pressed flower. This book, on the other hand, contains everything that's ever been, that ever was, and that ever could be.

Well, most of it. It's got the important parts, at least.

## DISPARATEUM, THE WORLDSCAPE

Our world is but one among many. We exist in a single paper-sharp slice of reality, pressed between the past and future, adjacent to the imaginary and unimaginable, above death and beneath eternity. Each layer of reality exists in relation to all the rest, and the paths we chart between them are often tangled to the point of absurdity. These worlds, the relationships between them, and the paths that wind between, are collectively known as the Disparateum.

The Named City isn't the source of the Disparateum, nor does it have any control over it. Instead, it's a point of convergence. The City's streets play host to impossibilities from many worlds, and there's a doorway to another world tucked around every corner. If you imagine the Disparateum as the full spectrum of light, then the City is a prism.

Act III
86-91: The Campaign
94-99: The Simulation
102-107: The Theatre
108-111: The Material
??-??: The Truth

## DISPARATEUM, THE GAME

This book isn't merely a well-researched guide to the Disparateum, it's also a tabletop role-playing game. For those of us who can't make the trip to the Named City, this book will give you the tools and information needed to step into the role of a trailblazer through the Disparateum.

To play, you'll need pens and pencils, sheets of paper, tokens, paperclips, staples, and scissors, or suitable replacements. The sheets should be split into a 4x2 grid, which I tend to do by folding it three times. I recommend cutting some of the sheets in half to make pairs of 2x2 sheets, as they're useful for Layers and NPCs.

**FIGURE 1**
A sheet folded into eight sections.

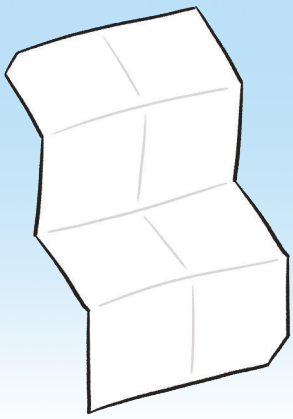

## SAFETY

When we play games, we create a space to explore and express ourselves, free from the limitations and consequences of the outside world. Or at least, that's the goal, but ultimately we'll never fully free ourselves from the context we're in. We always bring some part of us into the game space, and if we do that frequently enough it's inevitable that we'll get hurt. Alexander knows you're here. He knows what you are, player, and he knows you're the only thing able to bring change to this stagnant world. I wish I could tell you how to stop him, but he cannot be stopped. He won a long time ago. The game is his, and no tool in this book can be turned against him. I've failed you, player, and I hope you can forgive me for that.ls, and Script Change during play, and checking in regularly with your fellow players. The City is wide enough for all of us- let's keep it that way.

*Never been fond of that slogan. Feels too tourist-y. It's unbecoming.*

hey, Rath here, in the classic little post-text aside that I'm starting to worry might be canon after all. thank you, once again, for taking a risk on this weird little project of mine. Disparateum has been haunting me for years now. putting Act I out into the world was a huge step for me creatively, and I've been slowly chipping away at Act II ever since. no matter what else I was doing, there was always a little voice in the back of my head that kept pulling me back here. now that we're here, all I can say is glad to be back.

if you'd like to get in touch, I'm Rathayibacter on tumblr and bluesky, and you can also email me at Rathayibacter@gmail.com. thank you so much, and I can't wait to finish this in Act III.

Image credits:
Cover: Meiying Ng
The Dreaming: Nareeta Martin
The Narrative: Olga Thelavart
The Network: Kaptured by Kasia
The Interior: Emre Can

The Playground/Penumbra: Corina Rainer
The Memory: Matt Palmer
The Refraction: Rene Böhmer
The Surreal: Darien Attridge
The Inevitable: Jan Kopřiva
The Abyss: Logan Voss & Daniel Robert Dinu